FACTORY FIVE
RACING

Mk5 Roadster Complete Kit Assembly Manual

Contents

Foreword 9
Safety Notice 11
Safety Tips 12
How to use This Book 13
What You Need 13
Serial Number Identification 15
Optional part Instructions 15
Tools List 16
Required Supplies 17
Helpful Tools 17
Not using a donor 19
Donor Part Preparation 19
- Solid Axle 19
- Front Lower Control Arms 20
- Fuel Tank 22
- Fuel Filler Neck 22
- Steering Rack 22

Cleaning and Detailing 23
Unpacking Your Kit 25
Fastener Pack 25
Kit Parts Prep 25
Carpet and Dash 25
Body Removal 26
Aluminum Removal 29
Steering Rack 35
- Donor Mustang power steering rack prep 35
- FFR manual or optional power steering rack prep 36
- Steering rack install 38

Front Suspension 43
- Front lower control arm 43
- Front upper control arm 46
- Pivot endplay 50
- Adjusting the upper control Arm 50
- Front Coil-Over Shock Assembly 51
- Front Sway bar (Optional) 59
- Spindles 65
- Front Suspension Torque Specs Chart 68

Steering Tie Rod Ends 69
Front Brakes 72
Solid Axle Rear Suspension 80
- 3-Link Fasteners 81
- Solid Axle Preparation 81
- 3 Link Rear Suspension 86

Rear Axle install 90
Panhard Bar Frame mount 92
Rear Coil-Over Shock Assembly 92
Panhard Bar 100
3 link Rear Suspension Torque Specs Chart 101
Optional Independent Rear Suspension 102
Parts needed 102
IRS Fasteners 102
Parts preparation 103
Installation 111
Coil-Over Shock Assembly 125
Optional IRS Brakes 130
IRS CV axle Nut 130
IRS Swaybar (Optional) 130
Fluids 136
Capacities 136
Alignment specs 136
Torque Specifications 137
Emergency Brake 138
E-brake Handle 138
E-brake cables 154
Fuel System 162
Frame prep 162
Fuel Tank Vent 165
Fuel Pick-up 167
Fuel Gauge Sender 172
Fuel filler neck 174
Tank prep 177
Fuel tank install 178
Fuel filter 180
Hard lines 183
Vent hose 187
Pedal Box 188
Pedal pads 189
Brake switch mount 189
Clutch safety switch mount 190
Clutch Cable Quadrant 191
Frame Installation 193
Using Hydraulic clutch 196
Master Cylinders 198
Balance Bar adjustment 202
Accelerator Pedal 204
OEM Mustang 204
Complete kit Accelerator Pedal 205
Rivet Spacing Tool 211

Driver Front Footbox Aluminum 211
Steering System 213
Turn Signal switch assembly 214
Bearings 215
U-Joints 217
Steering shaft mounting 223
Upper Steering Shaft/Turn signal assembly adjustment 225
Cockpit Aluminum 229
Right footbox aluminum 230
Left footbox aluminum 233
Cockpit lower rear wall 235
Cockpit floors 236
Under door 238
Cockpit rear outside corners 238
Cockpit upper rear wall 240
Brake System 240
Brake reservoir 240
Brake Booster (Optional) 247
Front flexible brake lines 252
Hard Brake lines 255
Banjo bolt torque specs 269
Brake fluid filling/bleeding 270
Pedal adjustment 271
Chassis wiring harness (Complete kit) 272
Turn Signal Wiring (complete kit) 272
Ignition switch 274
Trunk Aluminum 274
Engine Prep 277
Engine/Transmission Installation 281
Transmission Mount 282
Engine Ground 284
Battery Mounting and Cable 285
Battery tray 285
Battery cable 291
Headers and J-pipes 292
Fuel line to engine 294
Oil Filter Relocator 295
Clutch Cable 296
Accelerator Cable 298
87-93 5.0L Fuel Injected Applications 299
Carbureted applications 300
Interior Fitment 301
Engine Wiring 301
Cooling System 302
Fan Mounting 302

Radiator mounting – Mustang 306
Radiator mounting – complete kit 310
A/C Evaporator 313
Stainless Radiator Hoses 314
Overflow Tank 317
Fan Wiring 319
Speedometer Sending Unit 320
IRS CV axle Nut 322
IRS Driveshaft adapter 323
Driveshaft 324
Solid axle 325
IRS 326
Aluminum panels 327
Transmission Tunnel rear corners 328
Transmission Tunnel U-Joint cover 328
Transmission tunnel front corners 329
Transmission Tunnel front top cover 329
Transmission Tunnel Cover 330
Left Footbox Side Aluminum 330
Right Footbox Side Aluminum 331
Trunk Recess Aluminum 332
Seats 336
Nameplate 338
Horns 339
Steering Wheel 346
Rollbar 348
Rollbar drilling 350
Trunk Hinge Arms 352
Trunk gas struts (Optional) 353
Rolling Chassis Check 357
Front Suspension 357
Fluid Levels and Grease 357
Suspension 359
IRS Axle Nuts 359
Wheels 360
Rattle Patrol 360
Footbox Fitment 361
Frame prep (Weatherstrip) 364
Mounting the Body 365
Rear Quick Jacks 365
Side mounts 367
Front mounts 369
Hood 372
Fitment and bumpers 372
Hood Hinge 375

Hood Handles 381
Hood Scoop 387
Hood fitment 392
Windshield 401
Interior Rearview Mirror 406
Door fitment 409
Door Latch 412
Striker 414
Trunk fitment 415
Trunk Latch 416
Side Mirror (Polished GT400) 425
Side Mirror (Brushed GT300) 429
Body Stripes/centerline 430
Body Cut-outs 431
Fuel filler 431
Tail light 434
Turn Signal 435
License plate light 437
Side exhaust 441
Headlights 442
Side louver 445
Roll bar 446
Final Prep 451
Body Painting 453
Carpet 455
Seats Harness 466
lap belt 467
Seat Final Install 468
Seat Harness Shoulder Belts 468
Shifter Handle and Boot 472
Emergency Brake Boot 475
Before body mounting 477
Headlights 477
Turn Signals 483
Tail lights 484
Gas Cap 485
Side Louvers 486
Weatherstripping 489
Final Body Mounting 491
Hood mounting 492
Radiator Aluminum 493
Rollbar mounting 497
Interior Rearview Mirror 498
Windshield Mounting 499
Door and Latch mount 503

Fuel Filler Neck 504
Fuel tank access covers 506
Final Trunk Mounting 507
Side Mirror 507
Light wiring 509
Check straps 510
Under door Aluminum 512
Gauges and Dash 515
Dash prep 517
Gauges 523
Base kit switches 525
Complete kit switches 526
Turn signal lights 531
Dash Install 532
Steering wheel center section 532
Side Exhaust 534
Aluminum Splash guards 537
Front Wheel 538
Rear Wheel 540
Finishing Touches 542
Headlight Alignment 542
Alignment Specifications 544
Brake Testing 546
Pad Bedding 547
Optional Parts 547
Maintenance 549
Wheels 549
1994-1998 rear end 550
Performance Modifications 550
Gears 551
High Horsepower Transmissions 551
Steering Rack 551
High Performance Braking Systems 551
Miscellaneous Brake Information 552
Seats 552
Helpful Reference Material 552
Must Reads 552
Helpful 552
Catalogs/Parts 553
Factory Five Aftermarket 553
Tools 553
Insurance 553
A Final Note about Completed Cars and Car Builders 553
Appendix A – Templates 554
Appendix B – Driveshafts 562

Appendix C – Race car check sheet.....563
Appendix D – Fluid Specifications.....566
Appendix E – Torque Specifications.....567
Appendix F – Metric Fastener Lengths.....568
Appendix G – Standard Fastener Lengths 569
Appendix H – Fastener Pack List 570

Chapter 1

General Information

Foreword

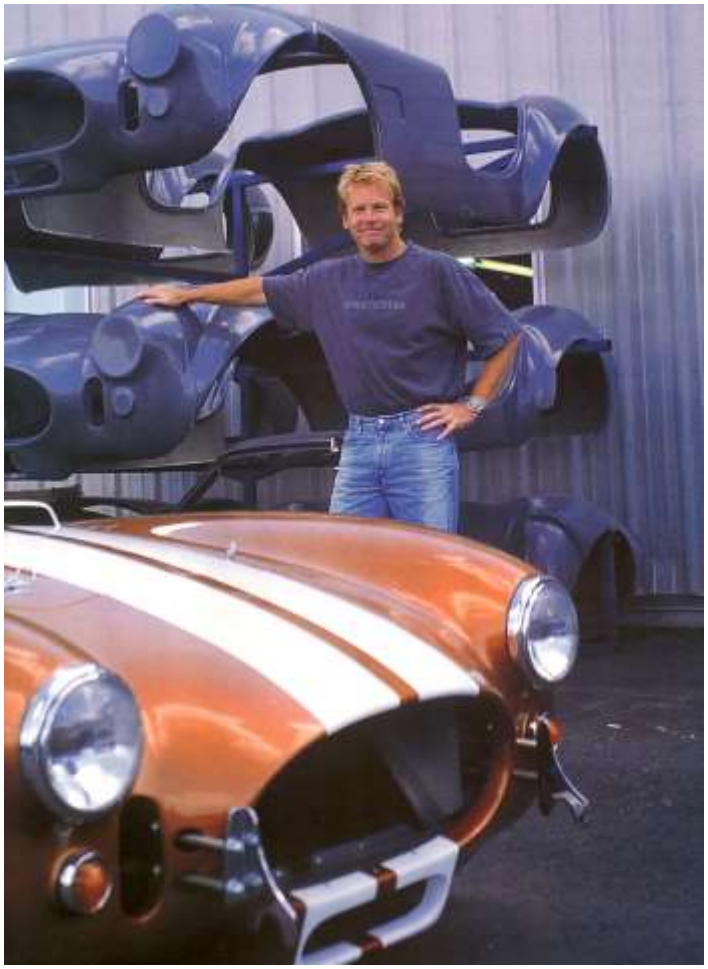

If you are reading this, you are embarking on a mission to build your own car, or at least considering doing so. I wanted to share with you some of my experiences and lessons learned while working with literally thousands of people who have completed this undertaking with us. The lessons learned here are important and will hopefully help with your decisions as well as with the project and the completed car.

The idea of building your own car is NOT for everyone. It is a serious endeavor that should be undertaken with care and consideration. The desire to build your own custom car goes way back. It is part of our uniquely American car-centric culture, and those who build their own cars are at the very center of this. Since the earliest days of Hot Rodding, literally tens of thousands of people have built their own cars. Even more have done restorations and major customizations to existing cars. As fun as this project is, a person should be candid about their abilities turning a wrench. This is not a place for novices. That is even truer in racing, where danger and risk are part of the very definition of always trying to go faster. The late Carroll Smith wrote something I really loved that speaks to this point.

"There is no magic! The one basic truth of successful racecar preparation bears repeating. There is no magic. There is only logic, common sense, forethought, vast amounts of hard work, and a fanatic dedication to the task at hand."
Carroll Smith
"Prepare to Win"

I cannot think of anything more appropriate to say about the right way to approach the serious work of building your own car. Carroll passed away not too long ago, but his accomplishments behind the Ford Lemans victories and his contributions to the motorsports community continues in his writings that are

all at the top of my list of recommended readings for the car builder or racer. After being honest about the skills, responsibility, and dedication required to build a car, I feel the need to talk about the PROCESS of building a car in an equally candid manner.

The process of building a car is a lot like the process of having kids. As a matter of fact, it is absolutely the best analogy I can find (apologies in advance to all of you without kids, try and bear with me). Both things are easy to get started. With a car project you order a manual, talk to car guys, get all excited over glossy photos and perhaps order a kit from us. With the whole pregnancy thing, well for most folks that is even easier to get started…

When my wife was pregnant with our first daughter, I was sure we would never have any more children. From the swollen ankles to the morning sickness, to the delivery room scene from the movie "Alien," the whole process was difficult, and while she did not complain too much thru the nine months, it was obviously hard work. Another thing, she would not have been the best salesman for others considering getting started on the baby thing.

When it comes to the car project, once the kit arrives and the process begins it is much the same as pregnancy. Frankly the degree to which a person breezes thru the project or languishes is commonly a factor of skill, but still, building a car for anyone is a tough job and there are inevitably issues. How many times have you gotten the wrong part at NAPA, gotten home to realize the alternator has a six ribbed pulley not five…? You will meet challenges building this car and you will be frustrated at times. Thankfully there are internet discussion forums where you can vent your frustrations and complain about the idiots who designed this kit. We smile when reading these posts because we know that while the pregnant woman complains, the mother loves her children in an unreasonable and perhaps even undeserved way!

All the way thru the process, as you build your car, the seasoned guys at Factory Five in tech support will help you. The larger community of Factory Five customers will also be there for you, as the one thing that really sets us above the crowd of other companies is the size, competence, and enthusiasm of our customer community.

When the baby arrives and when your car is done, there will still be more work. With babies, it is up all night, diapers, and strange maternity contraptions that men do not speak of in the light of day… With the car it will be other challenges. Registration and licensing can be frustrating and laws vary from state to state. A wrench dropped from 25 feet away will inexplicably shoot sideways into any freshly painted surface and my favorite was my own engineers who felt the need to test out how long an 8.8" rear diff can run on a track without gear oil (answer, about three laps before deciding to stop moving).

There will be highs and there will be lows, but in the end, there are few parents who do not treasure their children more than life itself, and there are few Factory Five owners whose lives remain unchanged by the experience and the artwork they have crafted.

It is one of the greatest experiences in the world to raise children. It is also one of the most rewarding things I know to build your own car. Even today at car shows, open houses, and events wherever Factory Five cars are found, I smile to hear the inevitable first words every guy says to me… "Let me show you what I've done."

The cars that we build are more than cars. They are a reflection of us. The badge of honor that comes with having built your own car is a special one indeed. You will join a community of others who have earned their own… and THAT is the story of Factory Five Racing and that is what awaits you in this process.

David Smith
President

Safety Notice

Warning!

Assembly of a Factory Five vehicle kit should ONLY be performed by persons experienced, trained, and familiar with custom vehicle work including, but not limited to, brakes, wheels/tires, engines/running gear, steering systems, suspension systems, automotive restoration, competitive driving, and all aspects of custom vehicle work. Failure to safely assemble a Factory Five Racing vehicle parts kit can result in serious injury or death.

Advice of Factory Five Technical Support does not guarantee proper installation. YOU, or the person who does the assembly must be qualified to do this. It is not possible for Factory Five to foresee or understand all potential issues that may arise during your build while we offer advice and assistance over the phone, via email, or even in person.

Do not assume anything. Like all vehicle work, improperly assembled vehicle parts can cause serious injury of death.

Purchaser expressly ASSUMES THE RISK of all personal, property, and economic injury, damage, or loss, either direct or indirect, arising from the use, misuse, or failure to determine the appropriate use of any Factory Five product.

Factory Five vehicles are part of a category of vehicles that include custom builds such as hot rods, Cobra replicas, and other high-performance vehicles. They are capable of extreme performance and should be operated safely, and only by skilled drivers. Do not loan your Factory Five to a friend!

Building your own car and racing are dangerous endeavors, and the buyer expressly assumes the risk of all personal, property, or economic injury resulting from the use of said products.

Ford and Chevrolet, GM and Cobra are registered trademarks.
Factory Five Racing, Inc. is not connected to the holders of these marks.

Safety Tips

- Read the manual. It is at least a good guide and place to start.
- Do not take short cuts.
- Before starting work, make sure you have the proper tools, the required parts, and sufficient space for the job. If you damage any parts, it will probably be because they were either not stored properly or, the wrong tool was used to install them.
- Do not work when you are too tired or upset. The car you will be building is capable of supercar levels of performance, and your life depends on the quality of your workmanship.
- Never work under a raised car unless it is well supported by stands intended for that purpose. Never work under a car supported by a jack.
- Always observe good safety practices such as the use of eye protection, protective clothing, and gloves.
- Keep the battery disconnected whenever you work on fuel or electrical systems and always keep a fire extinguisher handy.
- Do not allow children in the work area.
- Partially assembled cars attract a crowd. Keep garage doors closed or mark off work areas.
- Make sure that all electrical equipment is grounded. If working alone, have someone check on you periodically.
- When using an engine hoist, make sure that the working load rating is correct for the weight.
- Work in a well-ventilated and well-lighted area.
- Use portable safety lights for under-carriage work. Never use an exposed bulb type light.
- Be mindful of the environment. Avoid spills of solvents or engine fluids. If a spill occurs, clean up immediately and dispose of it in hazardous waste containers
- Never let a friend or someone else drive your car.
- Always wear your harnesses.
- Clean your build area after each assembly is completed. This will speed your build process as it ensures that you know where your tools are and prevents tripping injuries.
- It is impossible to anticipate all the possible hazards. Care and Common Sense will prevent most accidents

How to use This Book

This Assembly manual is intended to help you build your Factory Five Kit. This book will not explain such things as engine or transmission building. A secondary purpose of this book is to use it as reference for owners that want to do maintenance work on their cars or for those that purchase finished cars, to understand their cars better.
This manual was written with the average weekend mechanic in mind. It is best to follow the manual step by step but **if there is a part missing from the kit move to the next section and come back to it later** when the part is available. If the instructions are followed then the resulting car should be a great handling sports car.

ICON KEY	
✋	Valuable information
🛠	Tools needed
🚗	Parts Needed

We have included an Icon key as the beginning of each section that contains useful information for each assembly that details the tools needed for that assembly, what assembly in the kit parts are packaged in that are needed for that step and any useful information or warnings.

✋ Most fasteners are packaged together with a quick size key in the appendix.

Check out old and new build videos on our YouTube channel for additional help.

What You Need

For a complete check off list see the Appendix.

Engine: Small block Ford 289/302/351 with unequal length shorty headers, 5.0L Coyote engine*, 427/428 FE engine or Chevrolet LS engines*

*Check our parts catalog online for Coyote and LS install instructions.

Transmission: Tremec T5 or TKX.

Rear End: 1987-1993 Ford 8.8” rear axle.

Paint: Most customers will send out the body and paint work to a professional body shop.

Fuel pump: You are responsible for purchasing an external carbureted or fuel injected in-tank fuel pump.

Battery: We recommend a group 34 or a 925 sized battery.

Wheels and Tires: See the appendix for complete recommended sizes.

Serial Number Identification

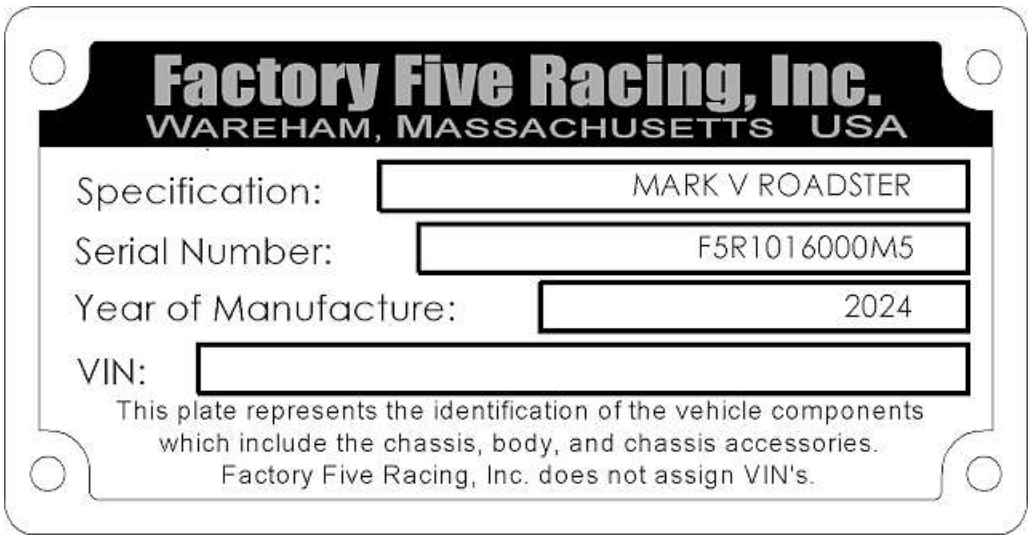

Factory Five Racing has included a Certificate of Origin along with a Nameplate for your kit. The serial number from the Certificate of Origin matches the number engraved on the 1.5”x 1.5” tube going across the car at the front of the cockpit. Above is an example of how the nameplate looks. The VIN number space is provided so that your state issued VIN number can be engraved if you so desire. This can be engraved at a Trophy engraver.

Optional part Instructions

Part instructions for all Factory Five parts and options can be found online at:
www.factoryfiveparts.com/instructions/

Tools List

The following lists detail the tools and supplies that are needed to build your kit. The "helpful" items are not crucial to the assembly but make life easier. Home Depot HUSKY®, Lowes CRAFTSMAN®, Tekton, and Snap-On® tools are all guaranteed for life and we have found them to be more reliable over discount tools.

Storage shelves for kit and running gear parts
Body storage area (can be outside)
SAE and metric socket set, a 52-piece set that includes an 18mm is a good choice
Deep sockets for some common sizes are helpful.
SAE Combination wrench set ($^{3}/_{8}$"-$^{15}/_{16}$")
Metric combination wrench set (10mm – 18mm)
Large adjustable wrench
Full set of standard and Phillips head screwdrivers
Standard Hex key set
Long nose pliers, 4.5"
Snap ring pliers
Pop rivet tool with $^{1}/_{8}$" and $^{3}/_{16}$" heads
Drill
Drill bits ($^{3}/_{32}$", ⅛", $^{9}/_{64}$", $^{3}/_{16}$", $^{7}/_{32}$", $^{5}/_{16}$", $^{7}/_{16}$", ½")
Driver bit set
Caulk gun
24 oz. Plastic Dead Blow hammer
Razor knife
Wire stripper/crimping tool
⅞", 1¼" and 2¼" hole saws (Body cut outs)
Bench top vise
Tape measure or straight edge ruler/T-square
Hydraulic floor jack
Work Bench or 2 Saw horses with 4'x 8' ¾" Plywood Top
Engine hoist
6' $^{5}/_{16}$" chain (to lift engine)
4 Jack stands
Hack saw (metal blade)
¼" & $^{5}/_{16}$" Fuel/brake line bender (hand held)
Jig saw (Body cut outs)
Torque wrench (Click style, ⅜" drive)
Eye protection
Gloves
The thing between your ears

Required Supplies

Stick with name brand products like Eastwood®, 3M®, and Duplicolor®. The Eastwood brand coatings are great for bringing weathered and oxidized parts up to show quality. PPG brand and DuPont brand paints are excellent.

_____ Silicone Door and window sealant, GE Silicone II or equivalent - 4 tubes
_____ Blue Loctite/Threadlocker – 0.20oz (6ml)
_____ Coolant – 2 gallons of concentrate
_____ Engine oil – 5-8 Qts
_____ Gear oil, 80W-90 (for rear end) – 2 Qts.
_____ Transmission fluid.
_____ Brake fluid, DOT 3 – 1 Qt.
_____ Oil filter
_____ Battery – Group 34
_____ Black permanent marker with pointed tip – 2 ea.
_____ 2" Masking Tape – 1 roll
_____ Duct tape
_____ Electrical tape
_____ Bodywork supplies
_____ Rags
_____ Gojo® pumice hand cleaner
_____ Spray paint (pick a color) – 1 can
_____ Acetone, carburetor cleaner, or other solvent
_____ Aluminum polish/cleaner
_____ 3M Super 77 spray adhesive – 4 large can

Helpful Tools

_____ #8 hex driver attachment for cordless drill
_____ Adapter for cordless to use ¼" socket driver
_____ Wire brush or wire wheel attachment for drill
_____ Flare nut wrenches (⅜" x $^{7}/_{16}$")
_____ Flat file and round file
_____ Scissors
_____ Chrysler upper balljoint tool Sunex SXT-10213
_____ Aluminum snips
_____ Friends
_____ Pizza and beer for previous line item

Chapter 2

Donor Parts and Prep

- This chapter deals with the Mustang parts needed in addition to our kit. Many people choose to use parts from a single Mustang donor. If you are not going to use a donor car but choose to acquire parts separately, this section may still be useful. The complete list of parts required to build the FFR Coupe is included in the Appendix of this manual. For specifications on the different year cars, check out the "Mustang Specifications" Appendix.

Not using a donor

- Many people will build this car without using a Mustang donor car. That is, they will want to use a combination of new and used parts from a variety of sources. Use your best judgment when buying new parts. Some of these parts, such as the pedal box and upper steering shaft do not get a lot of wear and are quite expensive when purchased new. These can be easily sourced from a salvage yard. An alternative would be the Factory Five Complete Coupe kit in which you are provided with all new parts except for Engine, Trans., wheels, tires, paint, and fuel pump. Check out details on the website.
- Read the appendix carefully to determine what you will need to get.

Donor Part Preparation

Solid Axle

- ¾" sockets, ¾" wrench, ½" drill bit, drill, floor jack, jack stands, Torque Wrench
- 8.8" Rear axle assembly, Solid axle adapters/hardware Box, Mustang lower control arms.
- Use caution when working with the rear end assembly, it weighs 225 lbs.

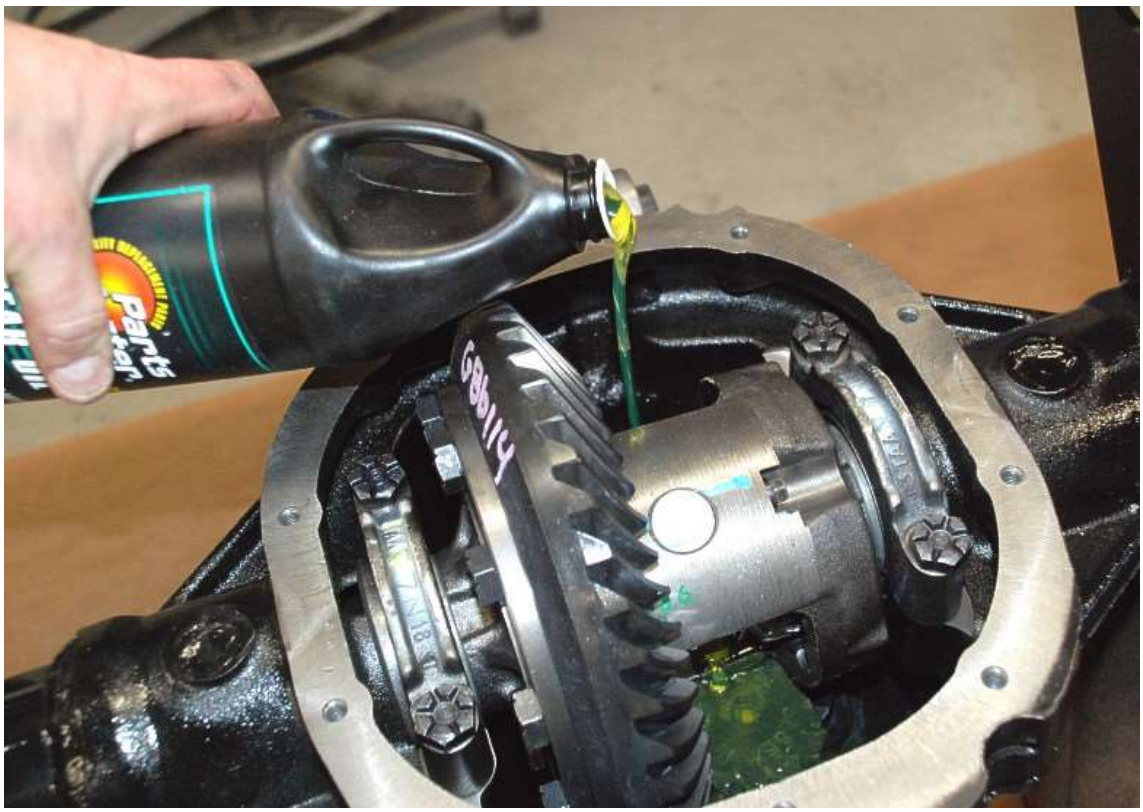

If not already done, fill the axle with gear oil. See Appendix for specifications and capacities.

If using a used rear axle, remove the lower shock mounts and the anti-vibration weight under the pinion.

Drill the lower control arm holes out with a ½” drill bit.

✋ The lower shock mount brackets will get used on the front lower control arms to mount the front shocks

Front Lower Control Arms

🛠 Hack saw, file grinder

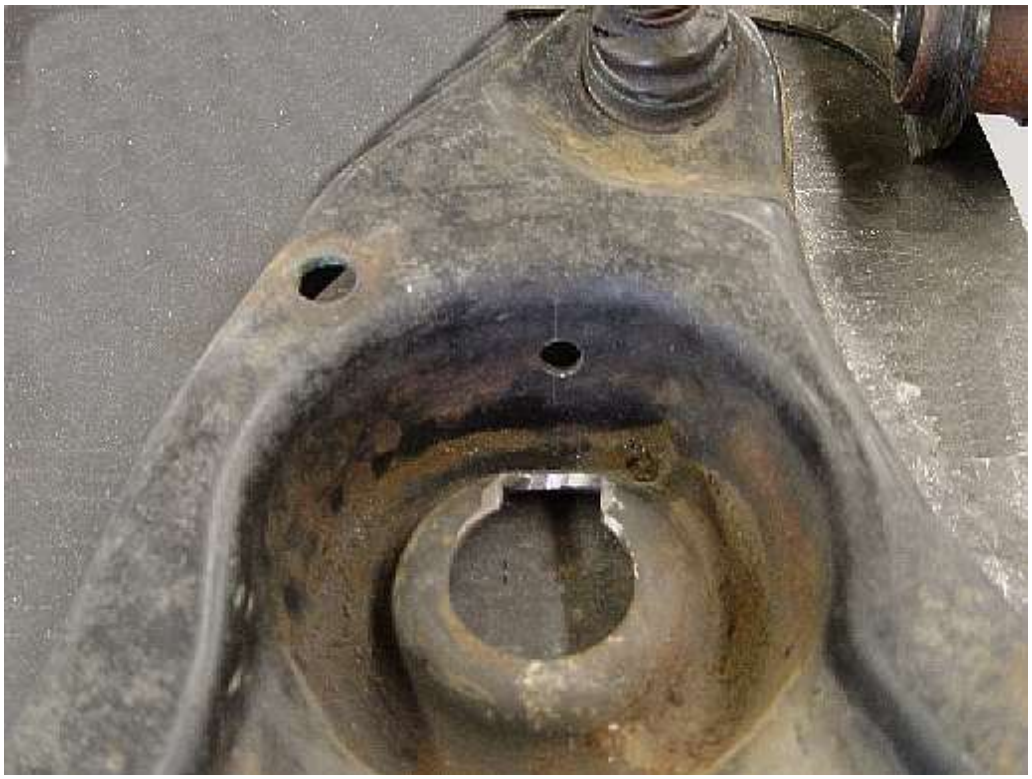

Remove the area, near the center of the spring mount to prevent damage to the coil-over unit thru any contact whatsoever.

Attach the rear shock mount to the control arm through the hole in the spring seat with the small leg sticking up.

Check clearance with the new shock and the new mount. These parts must move freely without contacting the control arm surface.

Fuel Tank

🛠 Pliers
🚗 Fuel Tank

At the locations on the tank where the tank straps come near the tank, use a pair of pliers, and bend the bent parts flat.

Fuel Filler Neck

🛠 Hack saw
🚗 Fuel Filler neck

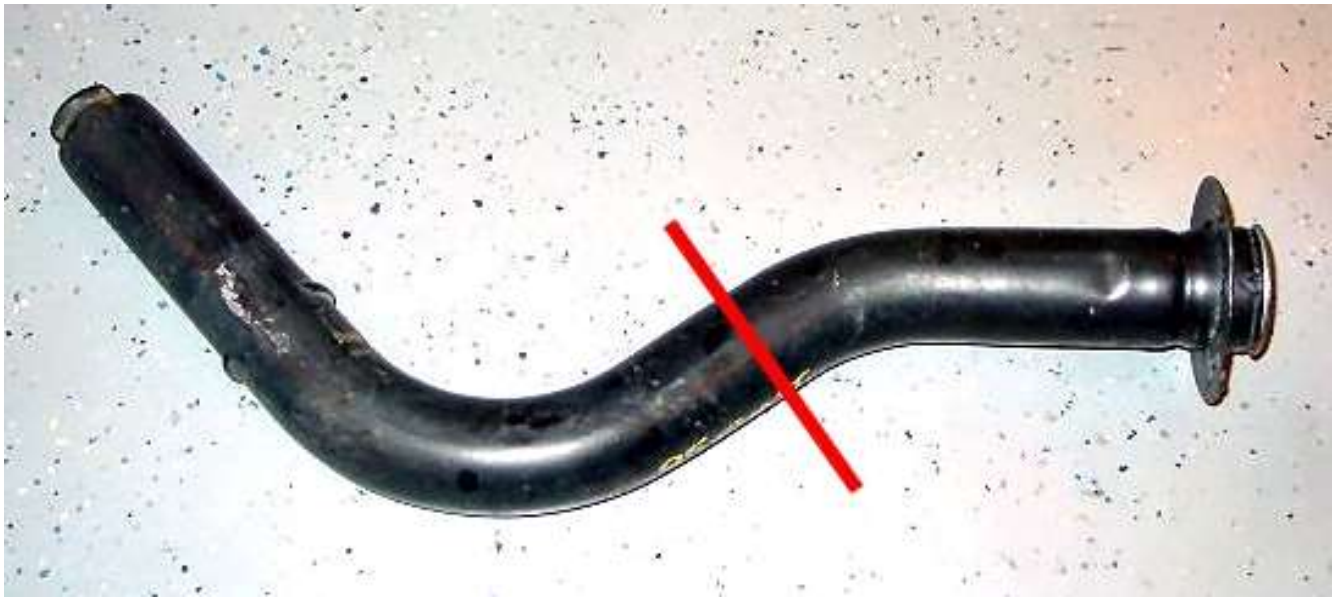

Cut the Mustang steel fuel neck in the mid-section after the 90° bend. Leave enough straight tube, to attach a hose clamp to each side.

Remove the inner rubber hose.

Steering Rack

🛠 $^{11}/_{16}$" and ⅝" wrenches, ruler, hack saw, marker.

Remove the outer tie rods.
Remove the inner tie rods.
Cut 1.75" off the end of the inner tie rods.

✋ If you are planning on running power steering the next steps are not needed.

Remove the hydraulic lines. Drain all fluid by turning it, lock to lock, upside down over a collection pan. Dispose of the fluid properly. The rack is greased on the gears at the ends.
The Mustang power rack is converted to a manual rack by removing the hydraulic lines from it and draining the fluid. You can leave the holes open without concern since the hydraulic cylinder is no longer used, however, for cosmetic reasons you may want to close them off. You can use a ½" non-threaded hole plug. Keep in mind, this must not be airtight! Air must be allowed to move in and out of the holes. If you use a hole-plug, drill a small air release hole in the center.

Cleaning and Detailing

✋ Before you start assembling your car, cleaning is the best way to assess what needs to be done to the donor parts. Based on your close-up inspection you may choose to re-build or replace some of the parts that you have just removed. Areas to inspect include transmission tail shaft side to side free play, pinion oil seal on the rear end, valve cover gaskets, distributor cap for excessive build-up deposits, and clutch wear.

✋ When using engine degreaser, collect the waste solvents and dispose of properly.

- Steam clean or use a strong detergent such as Gunk™ engine cleaner.
- If the parts are dirty, you can take the parts and assemblies to a do-it-yourself car wash. They usually have an engine degreaser as an option and most places run very high-water temperature that helps loosen debris and grease. If doing this, tape over the engine intake holes, engine wiring connectors, and coolant openings. Let the parts dry completely before removing the tape.

✋ Be sure to clean the bay after you clean your stuff.

- A wire wheel on a drill can bring even the most oxidized aluminum up to a nice finish. Be sure to wear gloves and safety goggles. This can be done on the bell housing, transmission, alternator, valve covers, steering rack, engine intake, water-pump, and engine accessory brackets.
- Apply clear coat paint on aluminum parts so the parts will not oxidize.
- Wire brush and paint control arms and the rear end. Avoid rubber bushings and quad-shock travel shafts (shiny areas). When repainting parts, a consistent color scheme works best and looks the nicest.
- Wait until the wiring harness is installed and the car is running before you cover the harness up with a nice wrapping of electrical tape. If it is dirty, wipe it off gently with a moist (not wet) rag.
- Use common sense when cleaning these parts; do not use a wire wheel on a drill close to any wires or lines. Keep solvents away from rubber lines/hoses.
- After cleaning the engine, replace the spark plugs. When removing the plugs, look for oil on them or if they look burned. If you have any doubts, ask a mechanic or a good auto parts store what the condition of the spark plug reveals about the engine's performance. When replacing the spark plugs, make sure you gap them before installing them.

Chapter

3

Disassembly of the kit

Unpacking Your Kit

- Boxes are numbered, when you read your packing list you will see that next to each assembly there is a number circled. This is the box number that the assembly was packaged in. The kit is packaged in the order that you will be using the parts.
- After everything is safely in your garage, open each box and do a physical inventory of all the parts.
- Call and report any potentially missing parts within 45 days of receiving your order.
- It is a good idea to work one box at a time and replace all the contents before going on to the next box.
- Write the contents of the box on the outside for easy locating later.

Fastener Pack

The Roadster kit packages all the fasteners together in one box. The assembly manual will tell you which fasteners to use in which location. There is a list of the fasteners in the appendix. There are also full-size fastener diagrams for both Metric and standard fasteners in the appendix.

Kit Parts Prep

There are a few parts in the kit that are packed as bare metal. This is done to allow you to paint, powder coat, or chrome the parts as you desire. It makes the build a lot smoother if you coat these parts ahead of time so you do not have to wait for them when doing the assembly. These parts are:

13203	3-LINK UPPER LINK AXLE MOUNT	EA	1.00
13704	SIDE EXHAUST SIDE MOUNT PLATE	EA	2.00
13531	DOOR LATCH SPACER	EA	2.00
12470	QUICKJACK, LEFT SIDE (HOOK ON OUTSIDE OF CAR)	EA	2.00
12471	QUICKJACK, RIGHT SIDE (HOOK ON OUTSIDE OF CAR)	EA	2.00
12426	DRIVER SIDE 4 INTO 4 SIDE EXHAUST	EA	1.00
12427	PASSENGER SIDE 4 INTO 4 SIDE EXHAUST	EA	1.00

Carpet and Dash

- Razor Knife
- Interior Trim/Carpet Box

If you have the space, unpack your carpet and dash material and lay them out flat to store until you are ready for them. This will prevent difficult wrinkles and creases when you go to install them.
If there are small wrinkles in the dash, place it outside in the sun and they should disappear.

Body Removal

🛠 ⅝” socket, Ratchet, ⅝” wrench, gloves, 2 friends.
✋ Be careful of the raw fiberglass edges, they can splinter into your skin

Unbolt the door from the hinge leaving the hinge attached to the chassis. Cut the zip ties in the door latch area.

Remove the hood and unbolt the trunk from the chassis.

Unbolt the body sides from the chassis on the underside of the car.

Unbolt the Quick Jacks and nose screws under the oil cooler opening.

Remove the body. Two people can do this but it is much easier with a third person to pull the sides clear of the chassis.

- When you store the body on the ground (unsupported) for long periods of time you may get slight distortion (bowing) around the walls forward of the doors. To avoid the chance of this happening, we recommend putting two short 2”x 4” braces (24” long) under the windshield holes (running vertically to support the hood cowl area just forward of the doors under the windshield holes). Use these 2”x 4” ’s whenever the body is on the ground, otherwise make a body buck to support it. A body buck diagram is in the appendix. The dimensions do not have to be exact. A rough shape is all that is needed to hold the body.
- The body shop may require it to be on a body buck so they can sand and work on it.

Body buck

Aluminum Removal

🛠 ¼” nut driver, jack stands, marker.

✋ Do one panel at a time. Be careful of the sharp aluminum edges, they can cut you.

Using a marker outline the underside of each panel where it contacts the chassis. This is done to locate where to drill rivet holes when the panels are permanently mounted later.

Mark each panel and take pictures of how the panels fit together (i.e., which is on top). Remove each panel after it has been marked until the chassis is bare. Keep the #8 screws to help with aluminum positioning later during build-up.

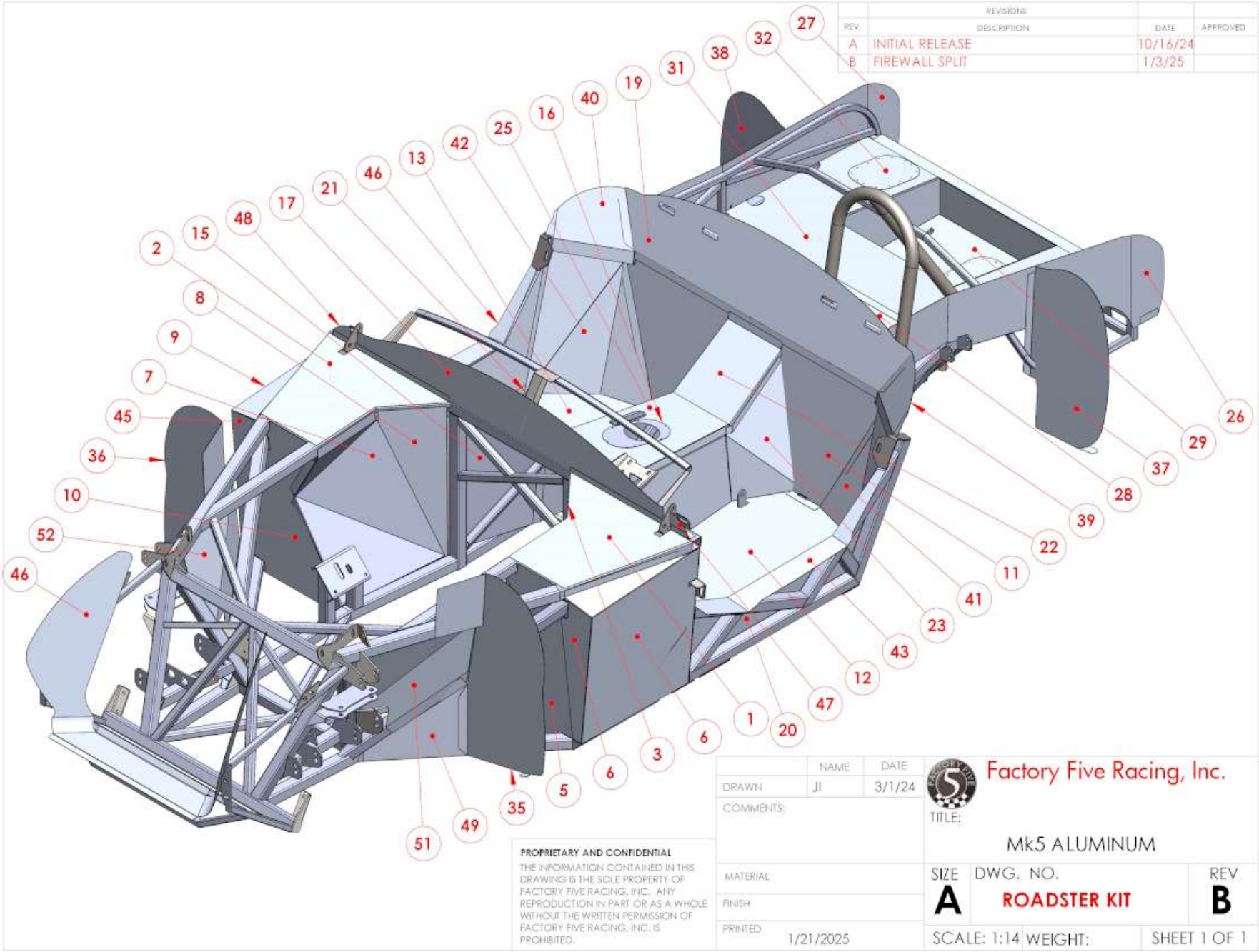
REVISIONS
REV. DESCRIPTION DATE APPROVED
A INITIAL RELEASE 10/16/24
B FIREWALL SPLIT 1/3/25
PROPRIETARY AND CONFIDENTIAL
THE INFORMATION CONTAINED IN THIS DRAWING IS THE SOLE PROPERTY OF FACTORY FIVE RACING, INC. ANY REPRODUCTION IN PART OR AS A WHOLE WITHOUT THE WRITTEN PERMISSION OF FACTORY FIVE RACING, INC. IS PROHIBITED.
NAME DATE
DRAWN JI 3/1/24
COMMENTS:
MATERIAL
FINISH
PRINTED 1/21/2025
Factory Five Racing, Inc.
TITLE:
Mk5 ALUMINUM
SIZE A
DWG. NO. ROADSTER KIT
REV B
SCALE: 1:14
WEIGHT:
SHEET 1 OF 1

ITEM NO.	PART NO.	DESCRIPTION	QTY.
1	17468	LEFT FOOTBOX TOP	1
2	17469	RIGHT FOOTBOX TOP	1
3	60139	FOOTBOX INSIDE UPPER WALL, LEFT	1
4	60132	LEFT FOOTBOX INSIDE LOWER WALL	1
5	17473	LEFT FOOTBOX FRONT	1
6	17471	LEFT FOOTBOX OUTSIDE WALL	1
7	60146	FOOTBOX INSIDE LOWER WALL, RIGHT	1
8	60148	FOOTBOX INSIDE UPPER WALL, RIGHT	1
9	17472	RIGHT FOOTBOX OUTSIDE WALL	1
10	17475	RIGHT FOOTBOX FRONT	1
11	17476	COCKPIT REAR WALL	1
12	17478	LEFT COCKPIT FLOOR	1
13	17479	RIGHT COCKPIT FLOOR	1
14	60161	COCKPIT TRANS SIDE, LEFT	1
15	60162	COCKPIT TRANS SIDE, RIGHT	1
16	14057	TRANS TUNNEL SHIFTER LOCATOR	1
17	17481	FIREWALL	1
18	17480	TRANSMISSION TUNNEL TOP FRONT	1
19	17485	BEHIND THE SEAT TOP	1
20	17487	LEFT LOWER UNDERDOOR	1
21	17488	RIGHT LOWER UNDERDOOR	1
22	17492	DRIVESHAFT COVER	1
23	17490	LFT COCKPIT REAR INSIDE CORNER	1
24	17491	RT COCKPIT REAR INSIDE CORNER	1
25	17493	TRANSMISSION TUNNEL TOP REAR	1
26	17495	LEFT TRUNK SIDE	1
27	17496	RIGHT TRUNK SIDE	1
28	17497	FRONT TRUNK FLOOR	1
29	17498	TRUNK RECESS	1
30	17499	TRUNK RECESS FRONT	1
31	17500	REAR TRUNK FLOOR	1
32	17802	TRUNK BLOCK OFF PLATE	2
33	17501	TRUNK BACK	1
34	17502	FUEL STRAP BLOCK OFF PLATE	1
35	17585	LEFT FRONT SPLASH GUARD	1
36	17586	RIGHT FRONT SPLASH GUARD	1
37	17588	LEFT REAR SPLASH GUARD	1
38	17589	RT REAR SPLASH GUARD	1
39	17719	LFT COCKPIT REAR OUTSIDE TOP CRNR	1
40	17720	RT COCKPIT REAR OUTSIDE TOP CRNR	1
41	17722	LFT COCKPIT REAR OUTSIDE LWR CRNR	1
42	17723	RT COCKPIT REAR OUTSIDE LWR CRNR	1
43	17786	LEFT UNDER DOOR TOP	1
46	17787	RIGHT UNDER DOOR TOP	1
45	17798	RIGHT FOOTBOX FRONT OUTSIDE	1

46	17816	RADIATOR ALUMINUM	1
47	17821	LEFT OUTSIDE FIREWALL	1
48	17822	RIGHT OUTSIDE FIREWALL	1
49	17832	LFT FRNT WHEEL LWR INSIDE SPLASH	1
50	17833	RT FRNT WHEEL LWR INSIDE SPLASH	1
51	17835	LFT FRNT WHEEL UPPER INSIDE SPLASH	1
52	17836	RT FRNT WHEEL UPPER INSIDE SPLASH	1

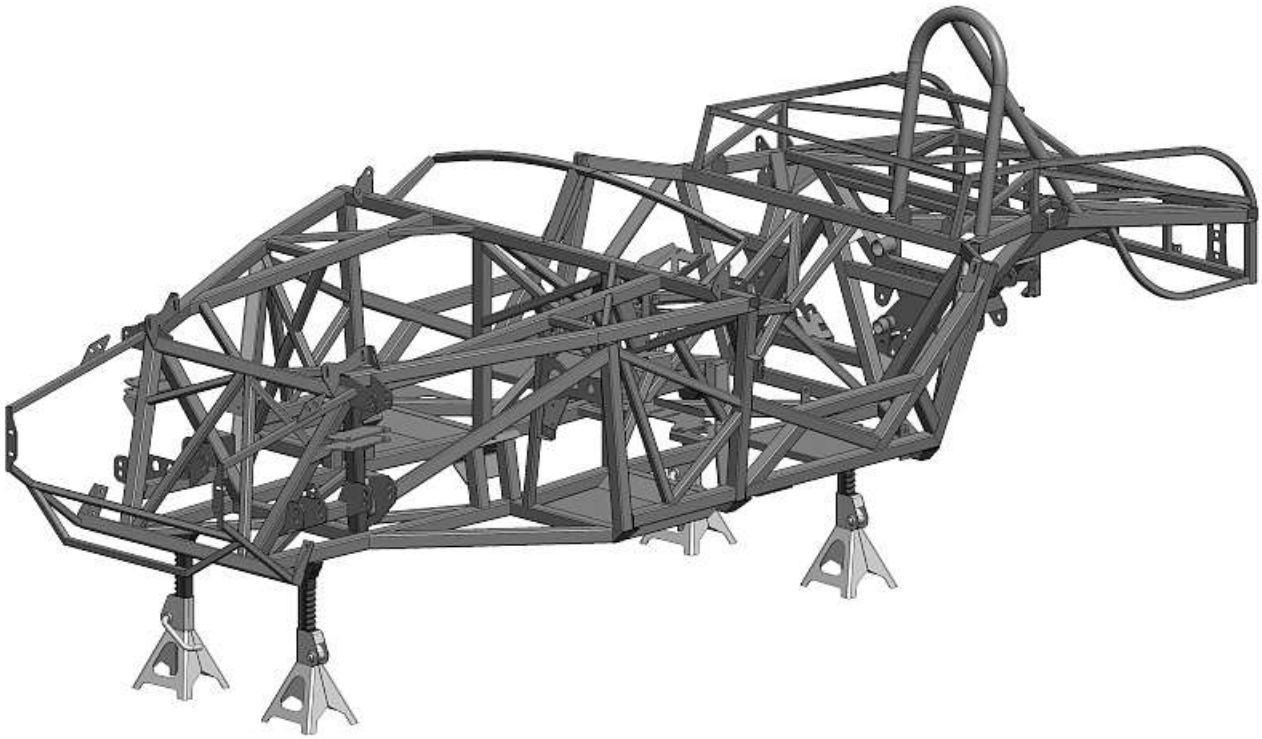

Use jack-stands to position your frame in your workspace with plenty of room to move things around.

Chapter

3

Chassis Assembly

Steering Rack

- Needle Nose Pliers, ¾” wrench, ¾” socket, Ratchet
- Steering Rack Assembly (Box 25), Steering parts (Box 1)
- If not using a donor rack, jump to the FFR rack section.

Donor Mustang power steering rack prep

Push the 2.45” spacers (Box 1) into the stock mustang rack bushings.

Steering rack extensions

- The inner Tie Rod Extensions are for **stock** Mustang Power Steering Racks only.
- The inner Tie Rod Extensions are **not** for the FFR manual steering rack.
- The inner Tie Rod Extensions are **not** for the optional FFR power steering rack.
- If using the Mustang power rack and you have not already done this in the donor prep stage, cut 1.75” off the end of the inner tie rod.
- Rack extensions (Box 1)

Pull back the rubber boot on the inner tie rod and remove the inner tie rod from the steering rack.

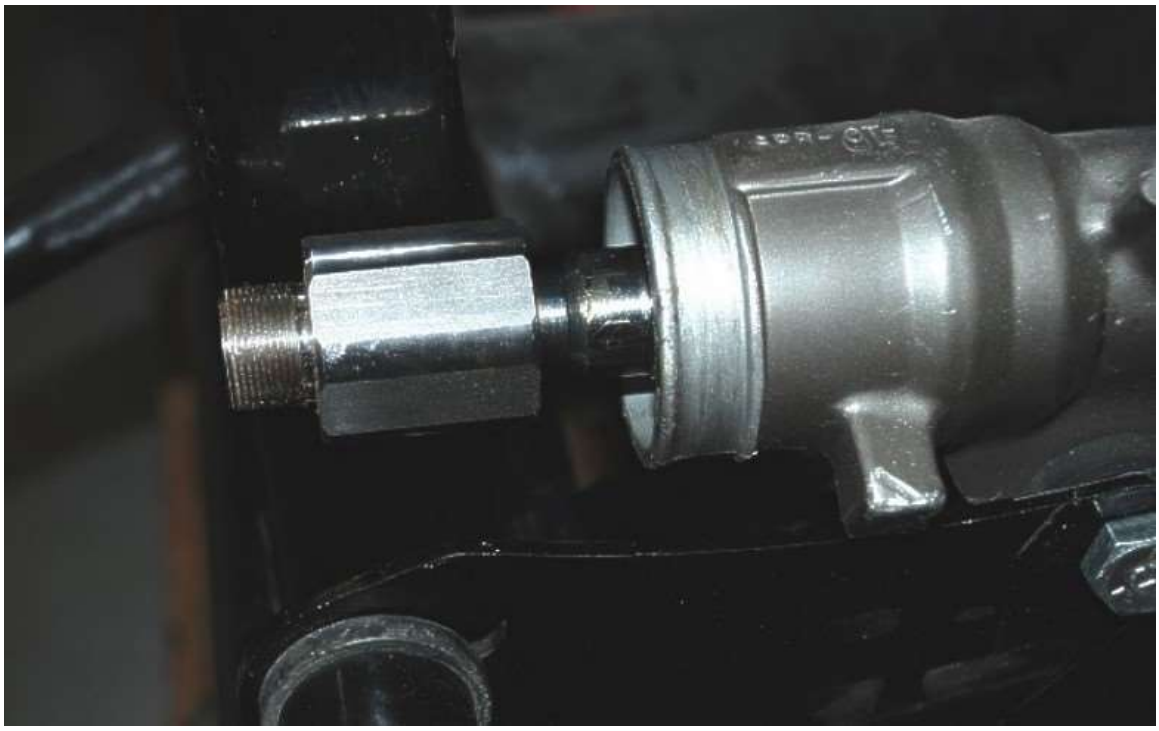

Put a dot of thread lock on the threads of the steering rack. Attach the steering rack extension to the steering rack using a 1.50” wrench and tighten.

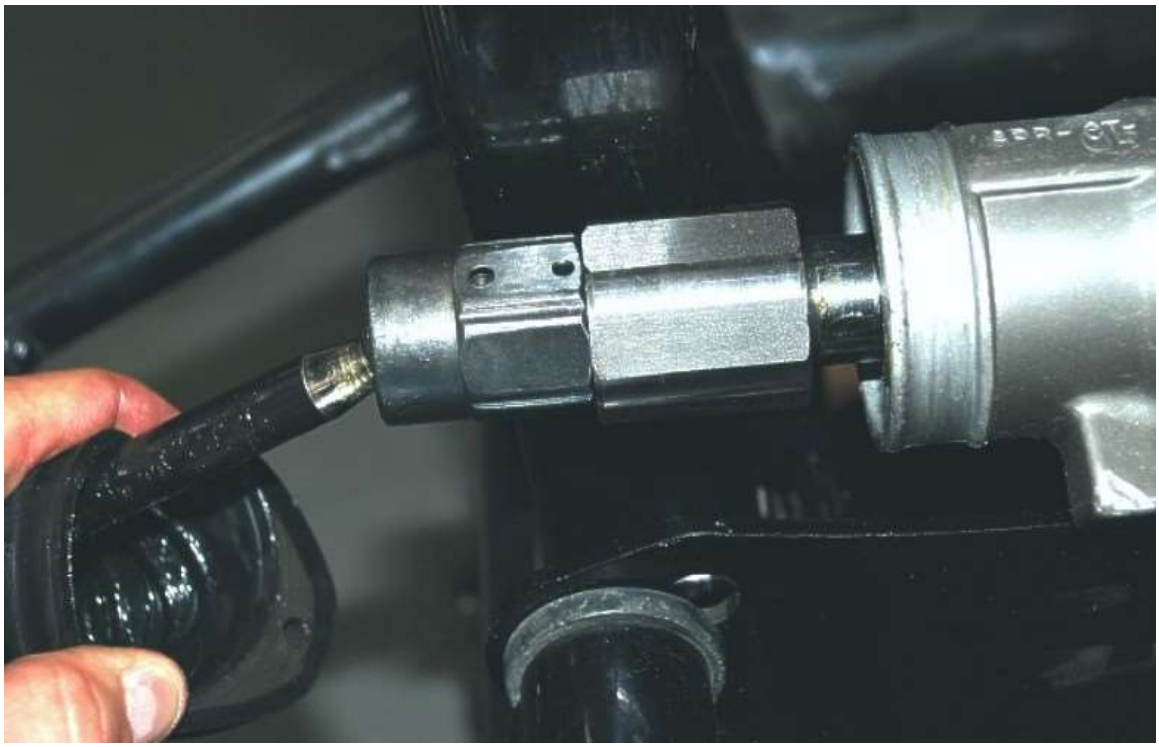

Put a dot of thread lock on the threads of the steering rack extension and attach the Mustang inner tie rods to the steering rack.

Push the boot back onto the steering rack body and attach with zip ties.

FFR MANUAL OR OPTIONAL POWER STEERING RACK PREP

Factory Five Manual and power racks are installed in a similar way.

Steering Rack Assembly (Box 25), Steering parts (Box 1)

Unpack the steering rack parts.

If the power rack has rubber bushings and sleeves in it, remove all of these.

Push the bushings and 2.45” spacers (Box 1) into the mounting bosses on the rack.

Screw the grease nipple into the outer tie rod ends.

The outer tie rods may come with either a castle nut and cotter pin or a nylon locknut.

Steering rack install

¾” wrench, ¾” socket, ratchet.
½” x 4” grade 8 bolts, washers, and locknuts.

Lower the rack into the chassis right side first. Allow the rack to drop far enough into the opening to swing the other side down into its mounting bracket.

Locate the rack between the mounting brackets.

Locate the ½” x 4” grade 8 bolts, washers, and locknuts.

✋ There are two sets of mounting holes, **lower** for standard street car ride height. **Top** for race car.

For standard street car ride height use the **lower** set of holes to mount the steering rack.

Insert the left side bolt from the back of the car forward through the frame, rack and front frame brackets.

FFR Power steering Rack

Locate the included support safety bracket (Box 25) FFR power steering rack only.

From the back of the right side of the rack, slide the bracket under the bellows cross tube and to the left side of the hydraulic line connection.

As the bracket goes forward, rotate it to go under the hydraulic line.

Line up the bracket mounting hole with the frame bolt hole.

Run the bolt from the back of the car forward through the bracket and frame.

Use a ¾” wrench and ratchet to fully tighten the locknuts on the bolts.

Front Suspension

Front lower control arm

🛠 ⅞” socket, 5/16”, 15/16” wrenches, Torque wrench

🚗 Mustang lower control arms or Front lower control arm assembly (Box 26).

Unpack the front lower control arms and hardware.

Screw the grease fittings into the arms using a $^{5}/_{16}$" wrench.

Use a grease gun to fill the lower control arm bushings until grease comes out the bushing flutes.

The balljoints are pre-greased but add a couple of pumps of grease to these as well.

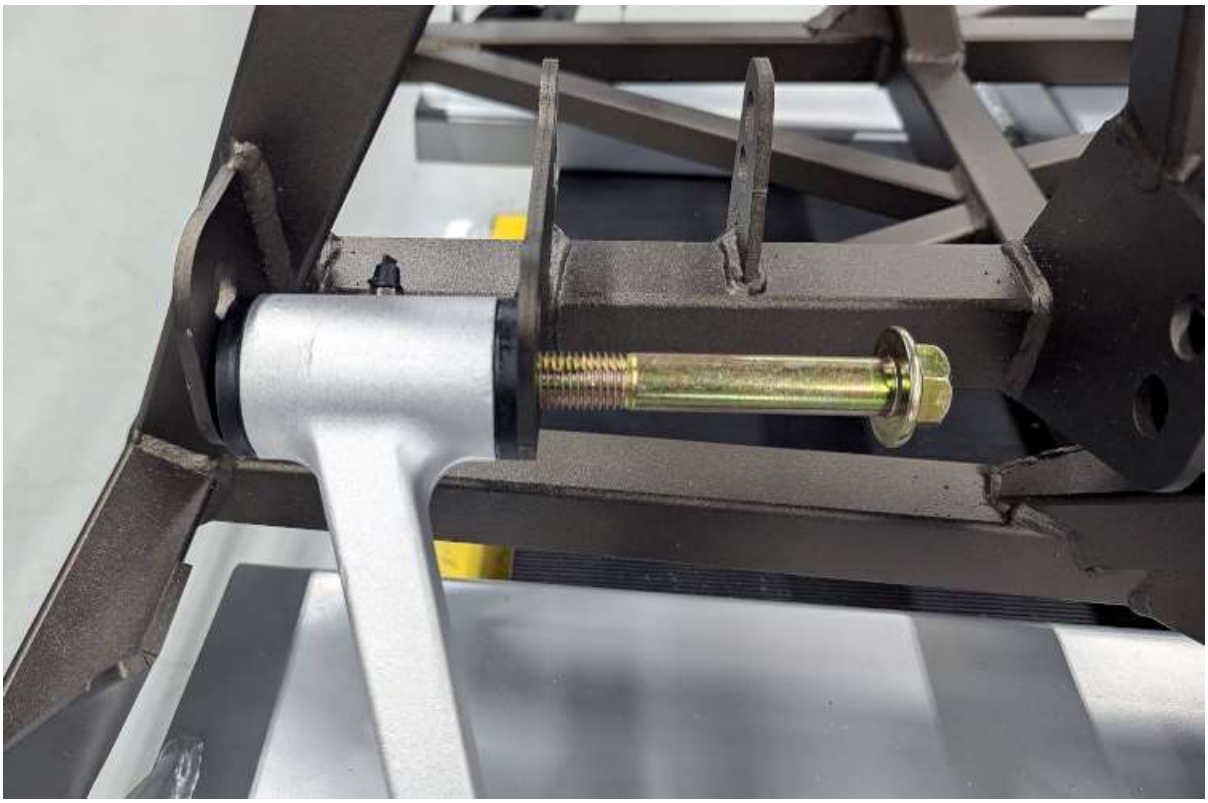

Mount the lower control arms using the lower set of holes on the chassis using the supplied hardware from the inside out.

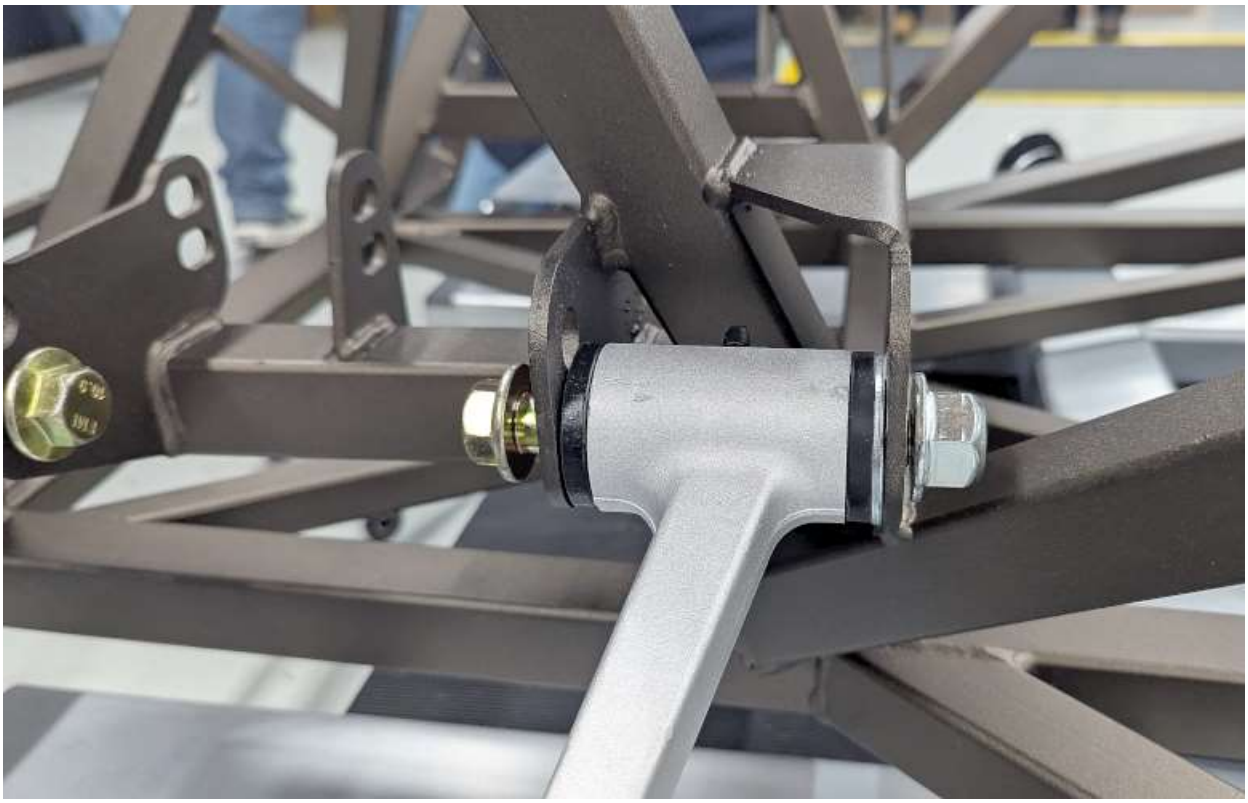

The rear bushing mount on the chassis is wider to be able to accept OEM arms so use the large washers provided to take up the extra space.

While holding the arm parallel to the ground, torque the bolts to **135-149Nm (100-110 lb.-ft)**.

Front upper control arm

🛠 Vise, Thread locker, ⅜”, ¾” wrench, ¾” socket, ratchet, Torque wrench, Chrysler upper balljoint tool if available.

🚘 Box 1 - IFS components, Fastener pack –½”x 1.75” flange head bolts and ½” locknuts

Unpack the upper control arms and ball joints.

Put thread locker on the upper balljoint threads.

Screw the upper ball joints into the control arms so that the balljoint angles out on the bottom

Tighten the balljoint using the arm for leverage with a Vice holding the ball joint.

If using the balljoint socket, Torque the balljoint to **169Nm (125lb-ft)**.

Screw the grease fittings in to the ball joints and tighten with a ⅜” wrench.

✋ The left side will have the solid side of the balljoint plate on the front side.

Slide the cross shaft in **between** the two mounting flanges and thread the mounting bolts into place with the nuts on finger tight.

✋ All pivot bolts on the control arm should be installed from the top of the arm so that the locknuts are on the bottom of the arm.

Torque the two bolts that hold the arm to the frame to **108-115Nm (80-85 lb.-ft).**

R model upper arm location

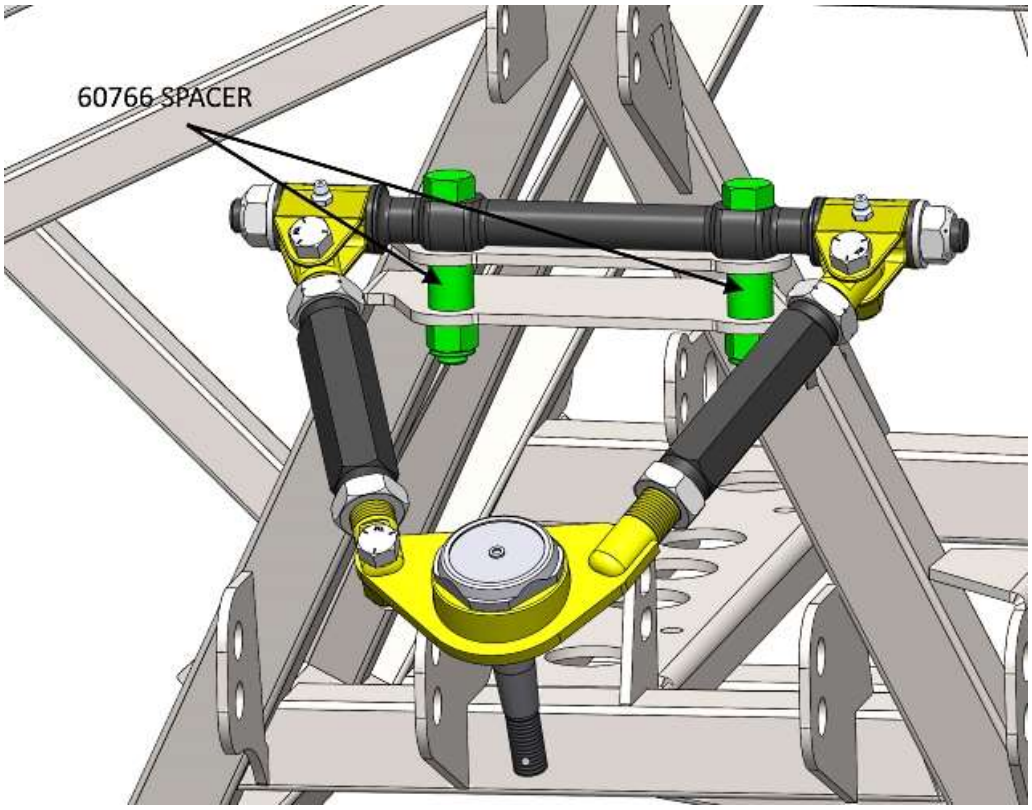

Set the cross shaft on top of the two mounting flanges, place the 0.84” spacers between the flanges then attach the arm using the ½” x 2.75” bolts.

Replace the bolt removed to get the arm in place, flip over any remaining bolts that thread in from the bottom up so all the bolt heads are on top and torque the two bolts that hold the arm to the frame to **108-115Nm (80-85 lb.-ft).**

Pivot endplay

Tighten the locknuts on the ends of the pivot shaft so that there is minimal endplay but so the arm can still rotate easily on the shaft.
The pivots may be a little stiff at first but once on the car they will loosen slightly.

Adjusting the upper control Arm

✋ Use the diagram below for reference.

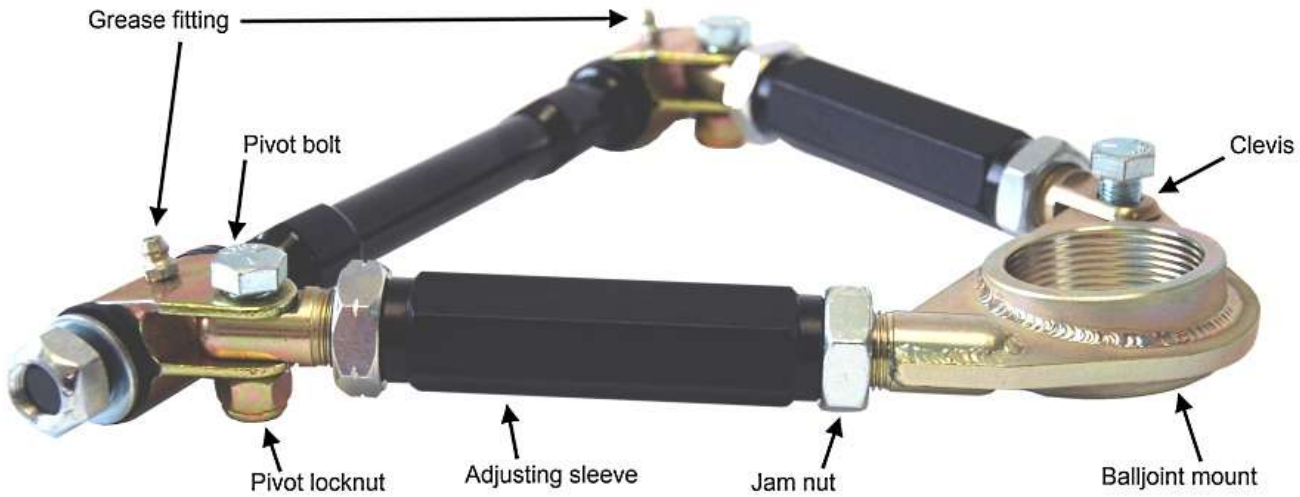

Slightly loosen the three pivot bolts using a ⅝" and $^{11}/_{16}$" wrench.
Loosen the jam nuts on both ends of each adjusting tube using a 1⅛" wrench. Turn the adjusting tubes to lengthen or shorten the arm.

- The left side will have the solid side of the balljoint plate on the front side.

After you have adjusted the arm to the desired length, tighten down the jam nuts against the adjusting tubes, and then tighten each of the three pivot bolts. Torque the pivot bolts to **54 lb-ft**.
Grease both ends using chassis grease frequently to insure smooth, trouble-free operation.

- If the pivots will not take grease, the endplay may be too tight.
- There should never be more than 1" of thread showing past the tightened down jam nuts on either end of both adjusting tubes.

The Pivot Bolts must be loosened slightly to allow adjustment while the car is being aligned and retightened afterwards.

Front Coil-Over Shock Assembly

- Snap ring pliers, ¾" wrench, ¾" socket, Ratchet, Torque wrench, chassis or white lithium grease.
- Box 3 Front shock set, Box 1 IFS Components, Box 4 Insulated clip hardware, (2) ½"x 2.75" + (2) ½"x 3.25" bolts, (4) ½" locknuts.
- The front shocks are pre-valved at the factory in compression and rebound for good street use. The shocks can be adjusted in rebound as per Koni's instructions if so desired. The front springs are 500lb. Other springs are available for different ride characteristics.
- Check the rebound setting on each shock. Although they usually come out of the box with rebound on the lowest setting (which is preferred with the standard spring rates) it is not unusual to find them set otherwise.
- WARNING! Incorrect assembly and maintenance of this part can cause serious injury or death.
- The front/IRS shock extended measurement is 15.15" center to center. They are 2.50" shorter than the solid axle rear shocks.
- If using the Nickle plated shocks, these must be mounted with the body of the shock down.

Unpack the front shocks, coil-overs, and hardware.

Double check the jam nut under the rod end and bump stop to make sure that it is tight.

Start the set screw in the spring seat.

Screw the spring seat down on the sleeve so it is closer to the unthreaded end.

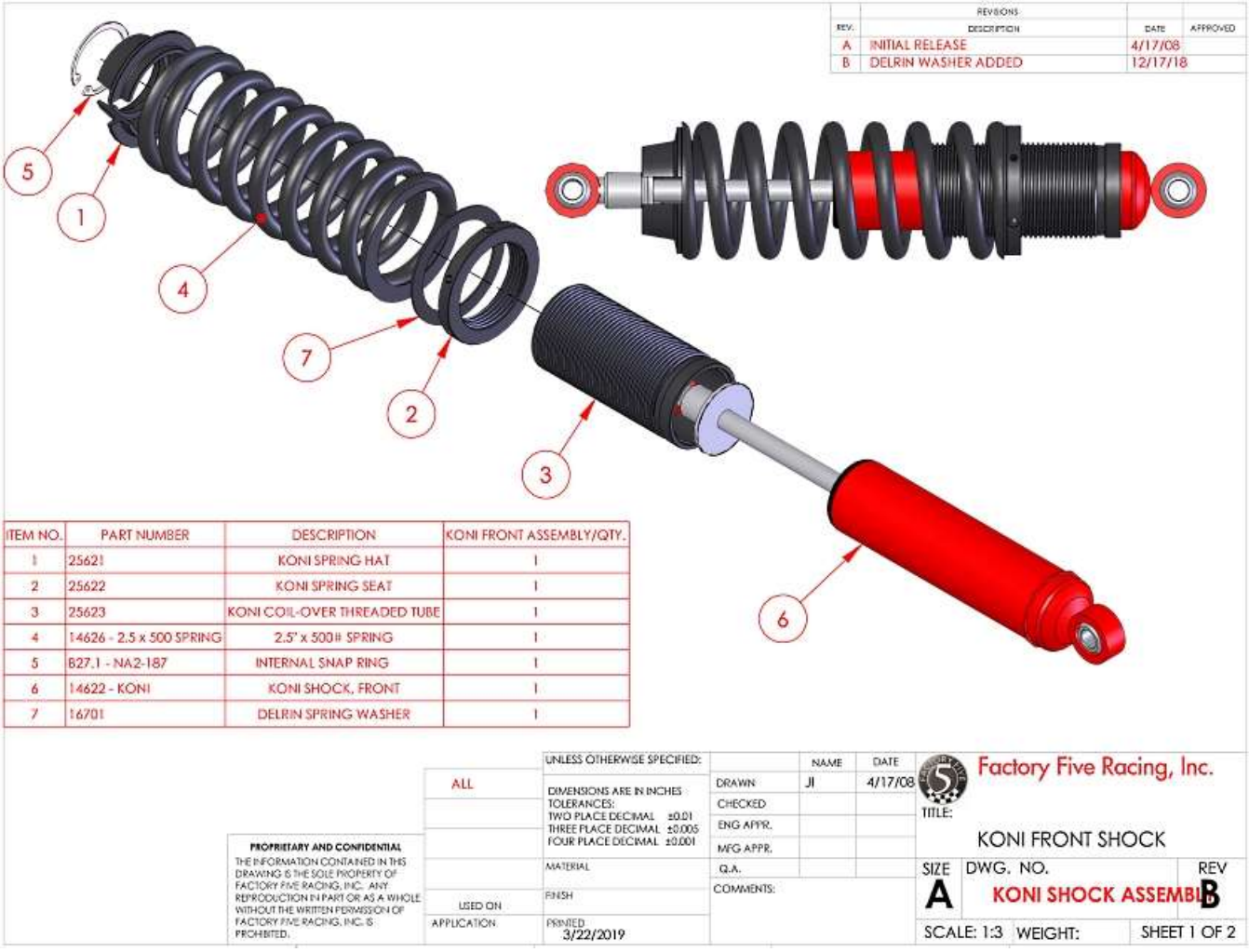

Slide the coil sleeve over the body of the damper beginning at the end which has the rubber bump stop. The unthreaded end of the sleeve goes first so that it will sit on the snap ring on the shock body.

Place a small amount of white lithium or chassis grease on one side of the Delrin washer.

Put the Delrin spacer grease side down onto the spring seat on the threaded tube (shown without tube)

Slide the rubber bumper about two inches down on the shaft.

Put the spring and hat on the shock and rotate the spring seat back up the sleeve so that the spring pushes the hat tight against the end of the shock.

Install the snap ring on the spring hat so that it holds onto the shock end. Make sure that the slot in the snap ring and the slot in the spring hat are not aligned.

✋ If using the Nickle plated shocks, these must be mounted with the body of the shock down.

- If using silver double adjustable shocks, these must be mounted with the body of the shock down using the top-hole location for both street and race cars.
- For the stock red Koni shocks, there are two sets of mounting holes, **lower** for standard street car ride height. **Top** for race car.
- If installing a front sway bar (Box 38) refer to those instructions and use the longer ½”x 3.25” bolts included with it instead of the kit 2.75” lower bolt.
- Install the sway bar after the shock install section.

Pass the shock assembly through the upper A-arm and attach them to the lower control arm using a 0.40” spacer, 0.50” spacer and ½”x 2.75” for the lower mounts. Run the bolt from the front of the frame towards the back.

Run zip ties through the holes in the spring hat and around the spring to prevent the spring from becoming unseated.

Fasten the red or nickel plated shock to lower holes in the top mount with the ½”x 3.25” bolts and 0.675” spacers provided.

If using silver double adjustable shocks fasten them to the upper holes in the top mount with the ½”x 3.25” bolts and 0.675” spacers provided.

Torque both upper and lower mounts to **40 lb-ft**.

Check to make sure that the spring is seated correctly on the shock.

Front Sway bar (Optional)

🛠 $^{9}/_{16}$”, ¾” wrenches, ¾” socket, ratchet, $^{5}/_{16}$” hex key, torque wrench.

✋ The sway bar assembly requires the Factory Five front lower control arms.

✋ The rod ends and Female rod ends have been shortened at the factory for most applications but may require cutting more if wheel clearance or a high ride height is used.

✋ Grease the bushing inside using the supplied grease.

Push the bushings onto the swaybar.

Insert the swaybar through the frame under the steering rack.

Attach the swaybar bushing bracket to the frame mount plates holes using a $^{5}/_{16}$" hex key and $^{9}/_{16}$" wrench.

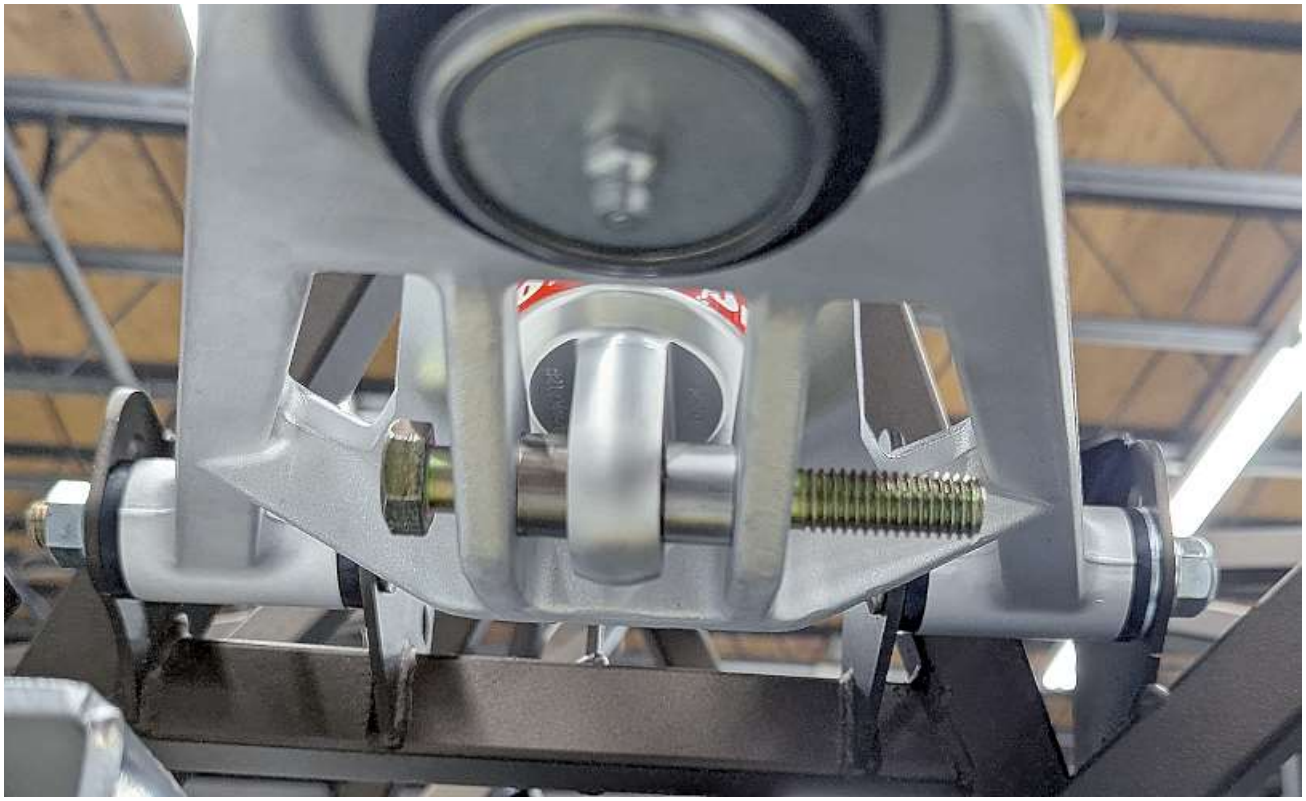

Change the lower shock bolt to the longer ½"-13 x3.25" one included with the sway bar and run it from the front of the car towards the back.

Screw the male and female rod ends all the way onto each other so they are 90° from each other.

Place two $^{1}/_{8}$" spacers on the bolt followed by the female rod end.

Check the swaybar mount bolt fit in the spacer.

If it is too tight, put the bolt in a drill and run some sandpaper over the bolt.

As a starting point, start with the 2nd hole from the end of the bar. If after driving there is too much lean when going around corners, move the bolt to the 3rd hole from the end and retry.

Run the $^{7}/_{16}$" bolt through the swaybar, spacer and the rod end.

Unscrew the rod end a thread or two if necessary to easily pass the bolt through the rod end and not preload the suspension.

Torque the lower bolts to **54Nm (40 lb-ft)**.
Repeat the process for the other side.

Spindles

🛠 $^{13}/_{16}$" socket, Torque wrench, Needle Nose Pliers, Rubber Mallet

🚘 Box 21 Spindle Assembly.

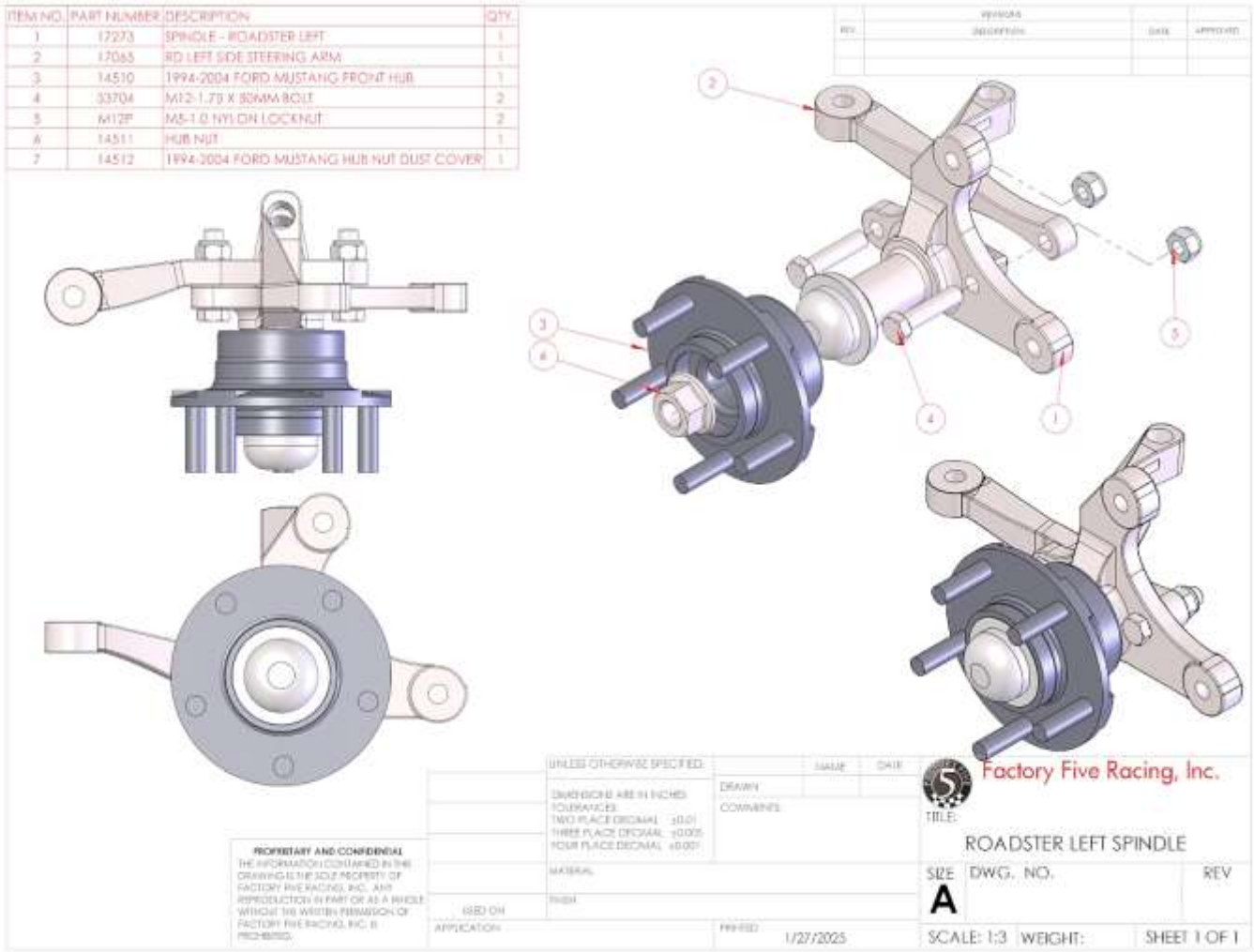

Unpack and lay out the hardware for the spindle's assembly.

✋ The spindles are marked DSS (Driver Side Spindle) and PSS (Passenger Side Spindle). These refer to the way they are mounted on the FFR Hot Rod which is rear steer. The Roadster uses these as front steer so they are mounted opposite. The DSS spindle is mounted on the right side and the PSS spindle is mounted on the left side.

Make sure the grease boot is in place on the balljoint then mount the spindle to the lower control arm.

Place the 15803 countersunk spacer under the castle nut to ensure that the cotter pin is at the correct height. There is a small taper on the inside edge of the spacer that should face down toward the spindle.

Torque to **108-122Nm (80-90 lb-ft)** and install the cotter pin.

Attach the upper ball joint to the spindle and torque to **75 lb-ft** and install the cotter pin.

✋ The upper ball joint boot will look crushed and out of shape when the car is in the air, this is OK. The boot will seat when the car is on the ground.

Bolt the steering arms to the spindles so the tie rod end will mount from the bottom. Torque to **60 lb-ft**.

The hub is a snug fit on the spindle and may require a light tap with a soft mallet to get in place. Torque the hub nut to **305-338Nm (225-250 lb-ft)**.

Using a large socket or a flat head screwdriver and rubber mallet, hit the dust cap onto the hub.

Front Suspension Torque Specs Chart

Item	Nm	Lb-ft
Front lower control arm to frame	135-162	100-110
Front lower ball joint to spindle	108-122	80-90
Upper A-arm to frame	108-115	80-85
Upper A-arm pivot bolts	73	54

Upper ball joint to Spindle	95-108	70-80
Spindle hub nut	305-338	225-250
Spindle steering arm to Spindle	81	60

Steering Tie Rod Ends

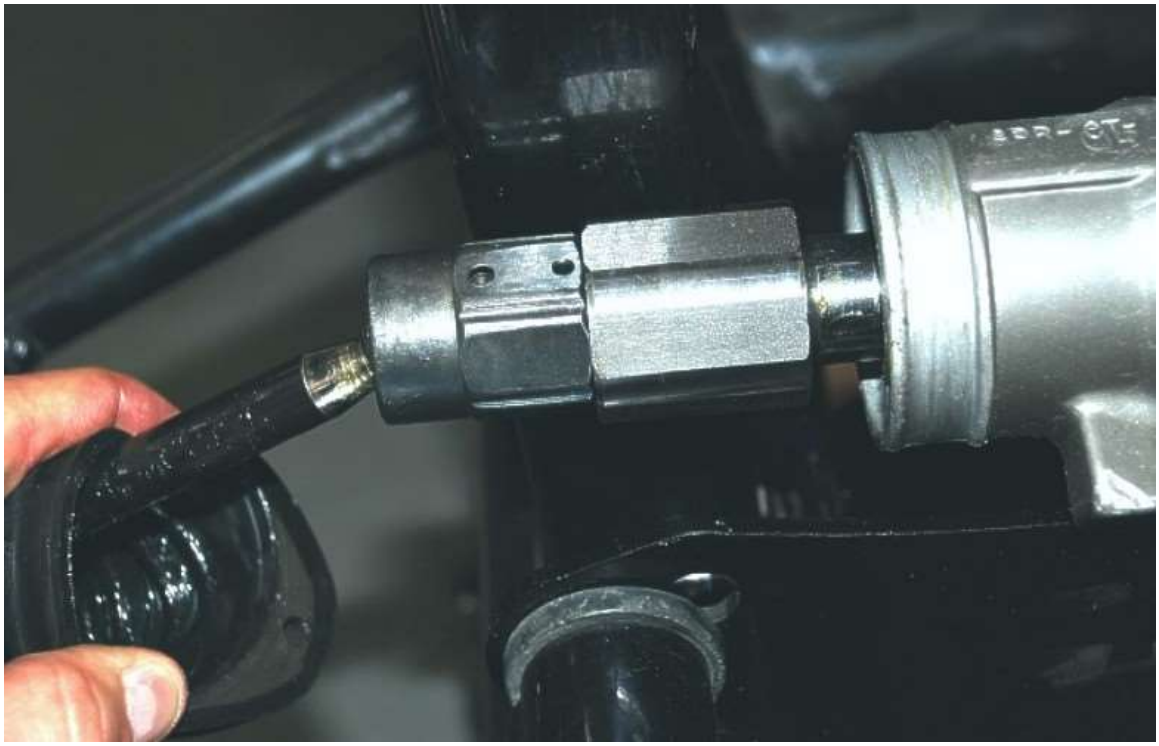

A reminder if using an OEM Mustang steering rack the inner tie rod extensions must get used.

Screw the grease nipple into the outer tie rod end.

Thread the outer tie rod and jam nut 1”-2” down onto the steering rack inner tie rod.

✋ The outer tie rods may come with either a castle nut and cotter pin or a nylon locknut.

Insert the tie rod ends into the spindles with the nut hand tight.

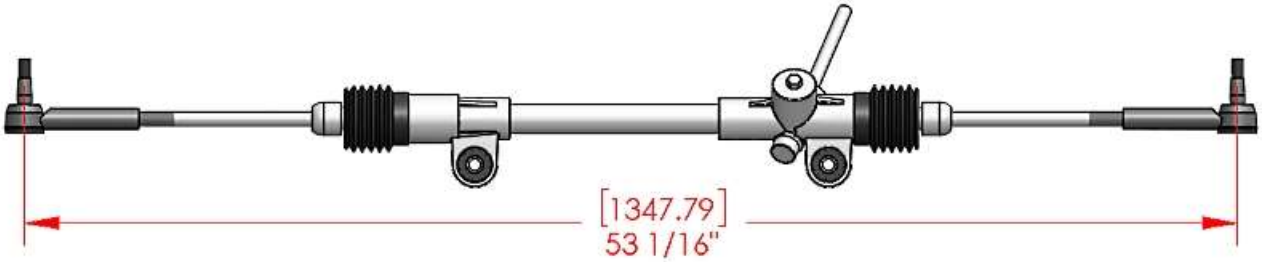

As a rough setting until an alignment can be done, the center-to-center distance for the top of the outer Tie Rod End stud should be 53.0625.” Try and keep the number of threads sticking out the same on both sides.

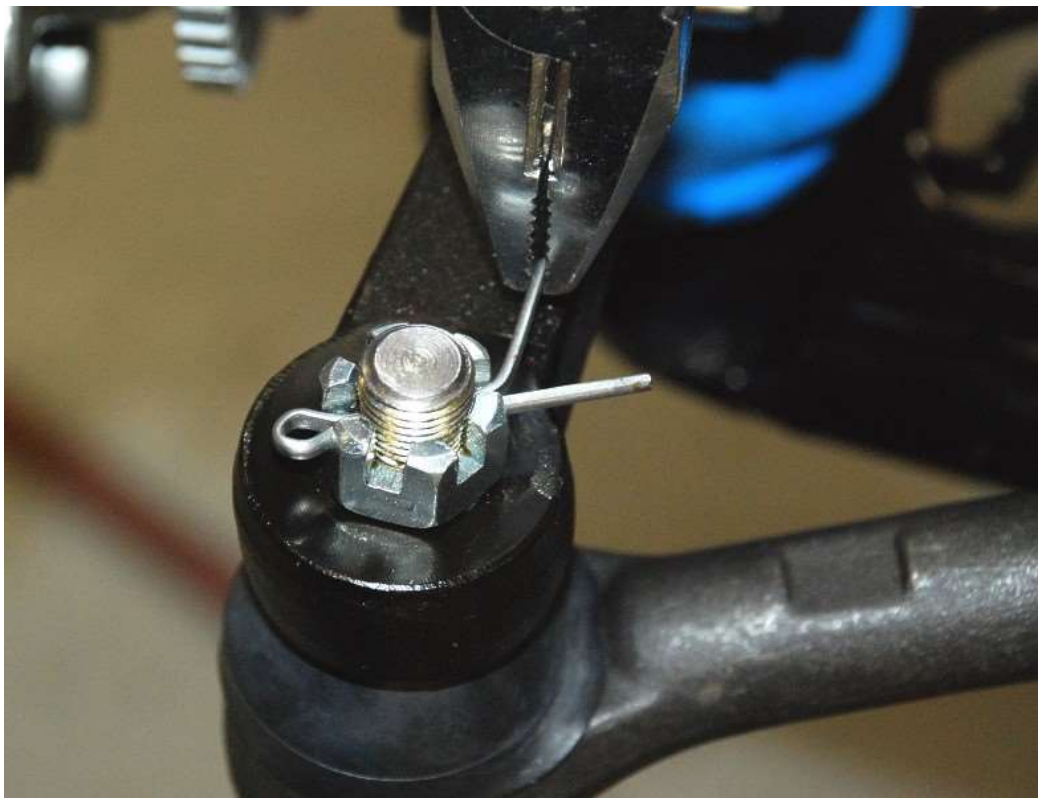

Torque the Tie Rod End nut to **25 lb-ft**. If a castle nut is used, torque the nut then install the cotter pin.

✋ If the tie rod has a locknut instead of a castle nut, torque to **80Nm (59 lb-ft)**.

Front Brakes

🛠 12mm socket, Ratchet, 16mm wrench, Torque wrench, thread locker
🚘 Box 18 Front Caliper/Rotor Assembly
✋ Check out www.factoryfiveparts.com for Wilwood brake options.

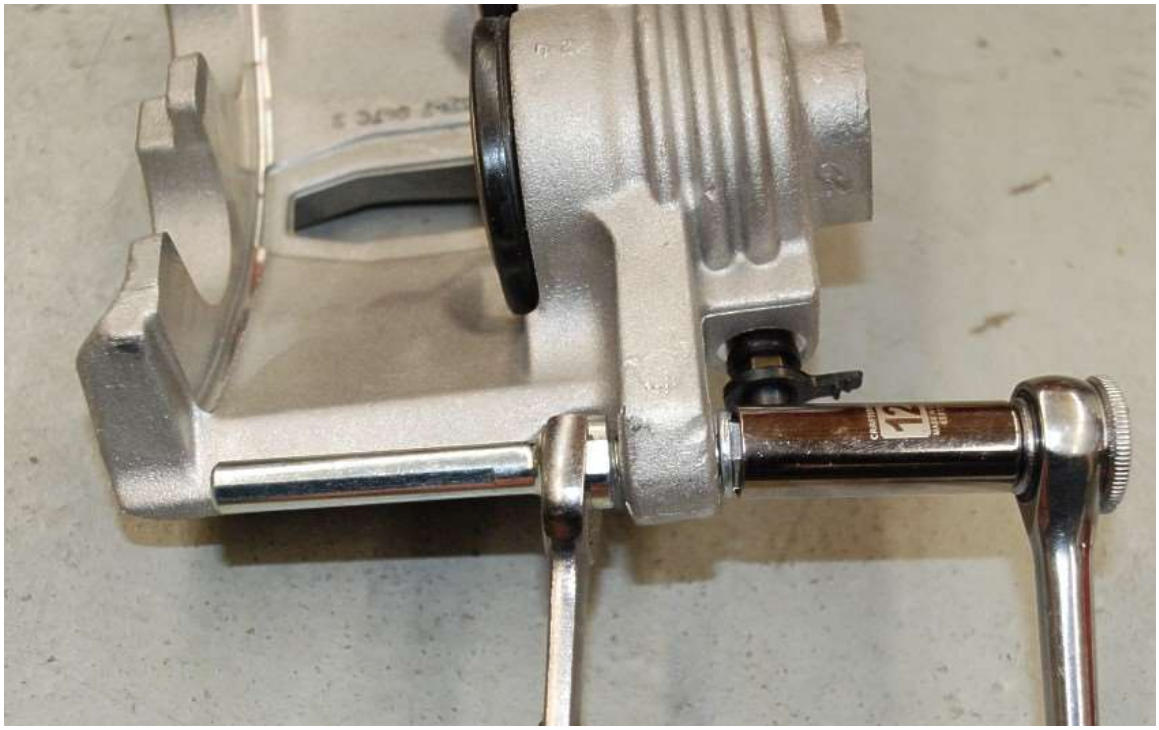

Install the caliper slider pins on the caliper using the supplied bolts and a 16mm wrench and 12mm socket. Torque to **23-26 lb-ft**.

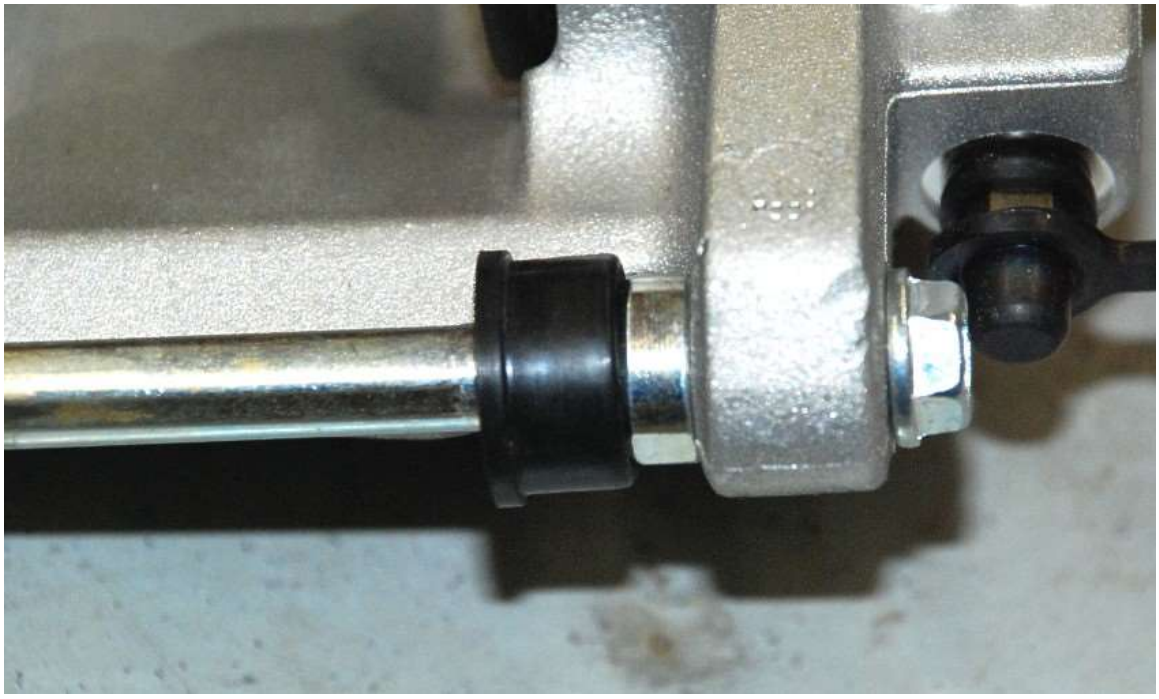

Install the slider grease boots on the slider pins.

There are six steel clips that are designed to separate the pads from the caliper. These clips allow the pads to slide on a smooth surface and not wear on the caliper. The four clips that go on the ends of the hanger are different end to end, and must be installed with the long tab facing out.

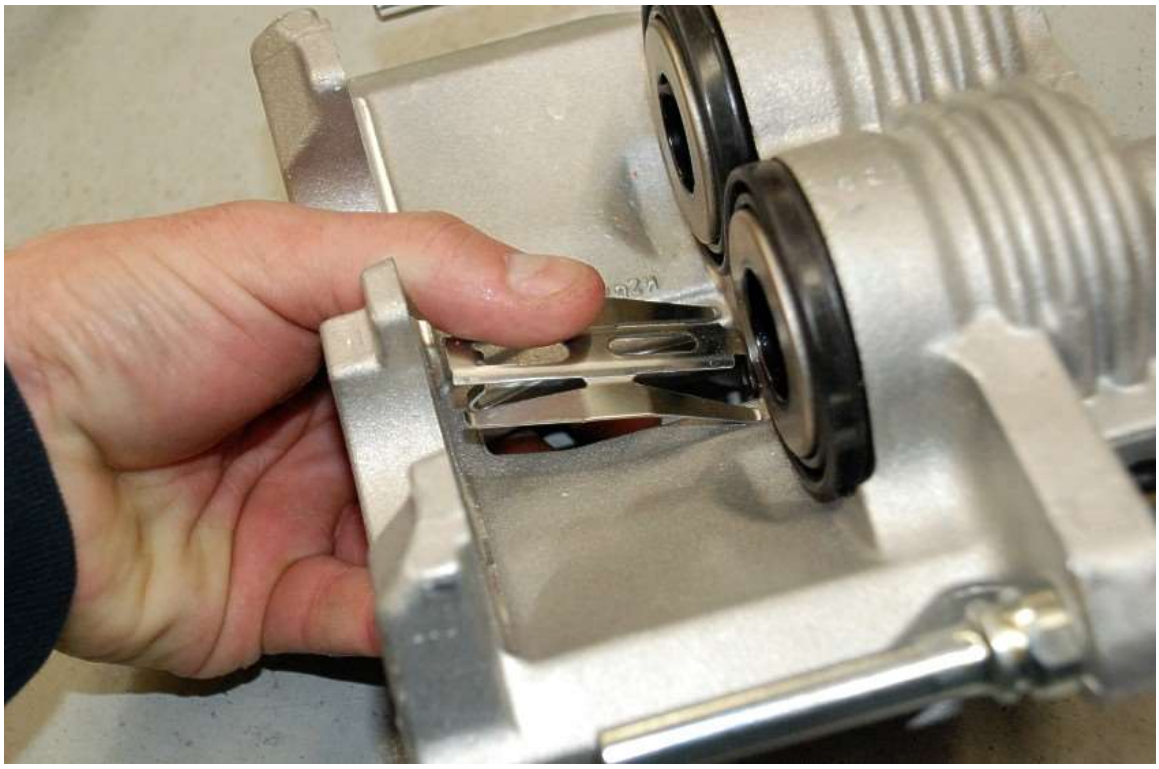

The two clips that are left go in the center of the caliper with the tab sticking up through the center hole. Insert the clip from the inside of the caliper through the large center hole with the larger tab on the side facing the pistons then press down on the outer part of the clip so the small clip goes through the large hole and clips on.

Grease the slide pins using the supplied grease.

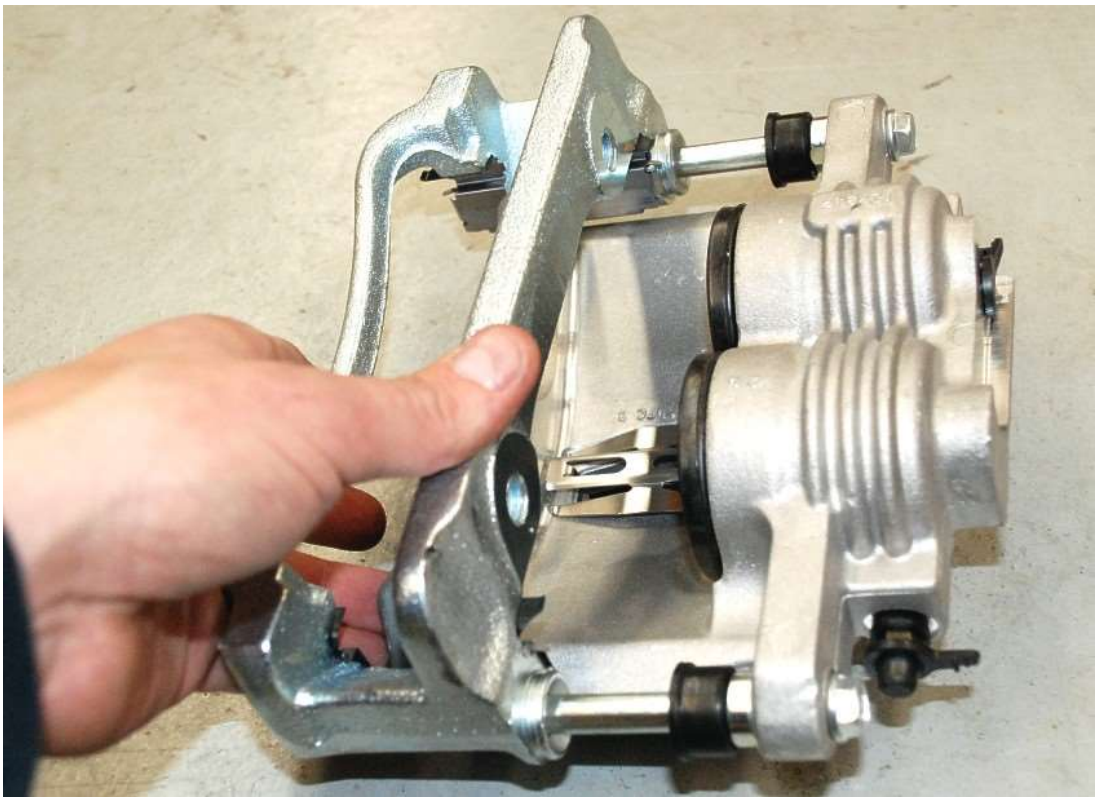

Slide the caliper hanger onto the caliper.

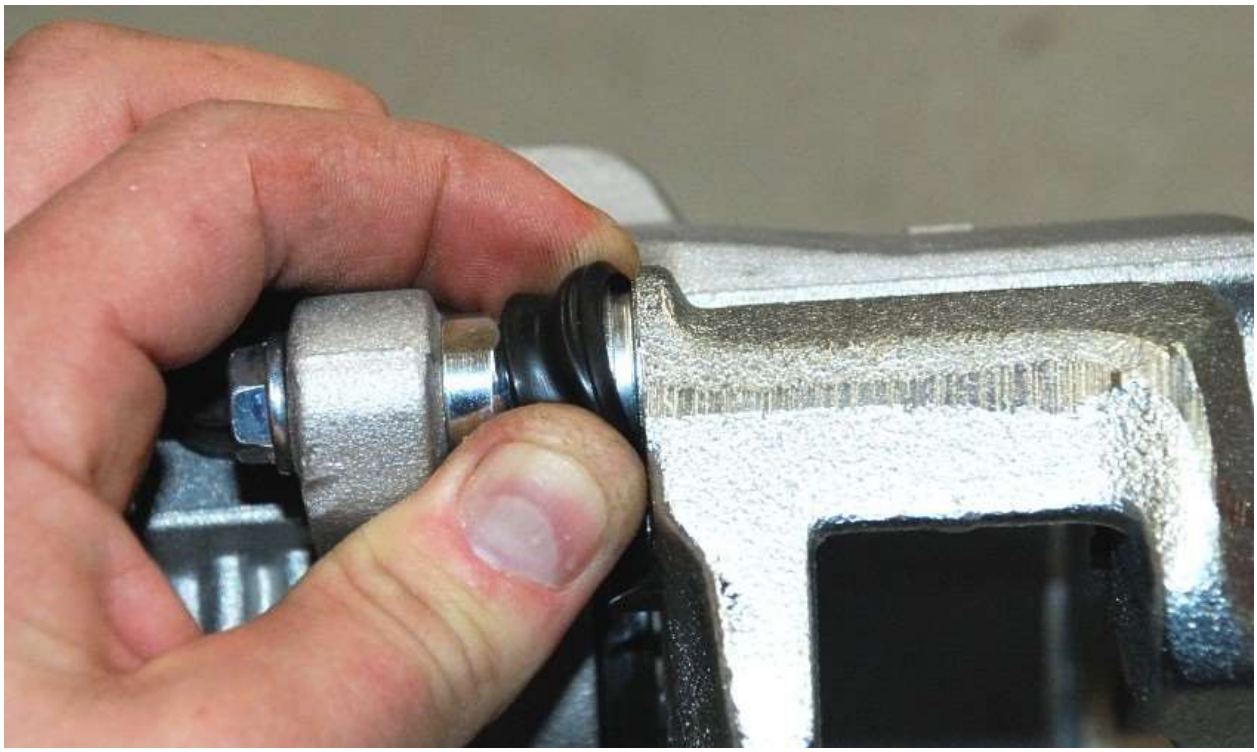

Push the rubber boots over the lip on the caliper bracket to seal the slider bolts correctly.

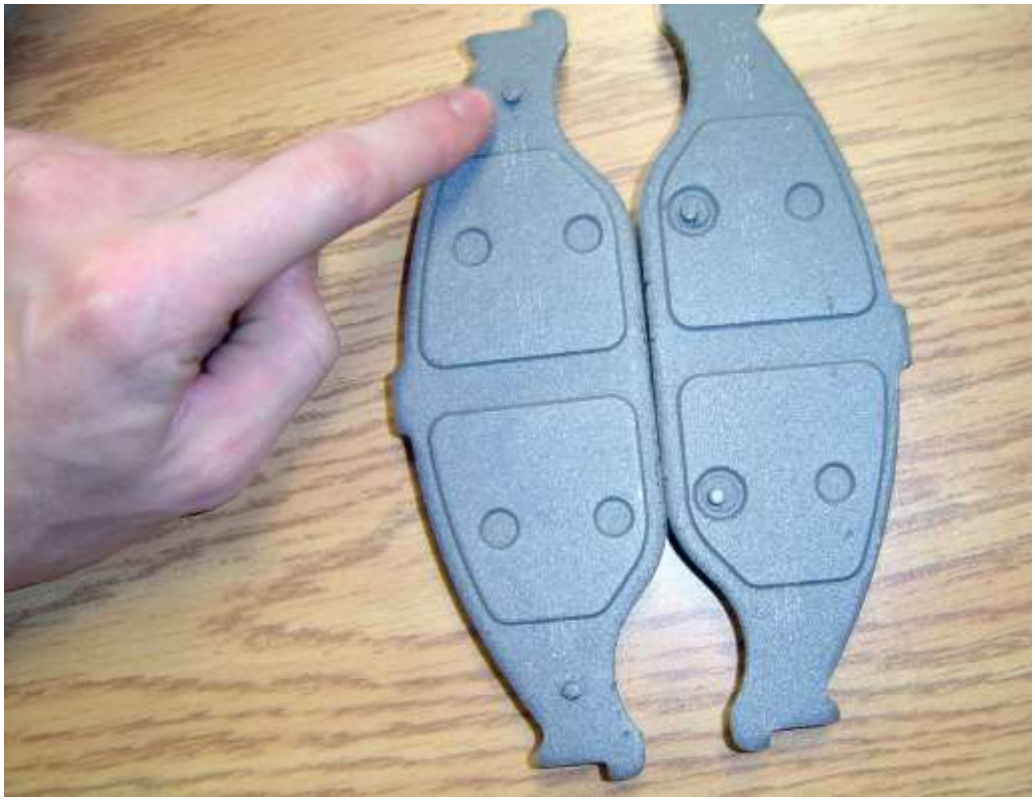

Look at the back side of each brake pad to find the inside pads and the outside pads. The difference is the location of the studs that are on the back of each pad. The studs on the inside pads are out near the ends of the pad, while the studs on the outside pads are near the middle.

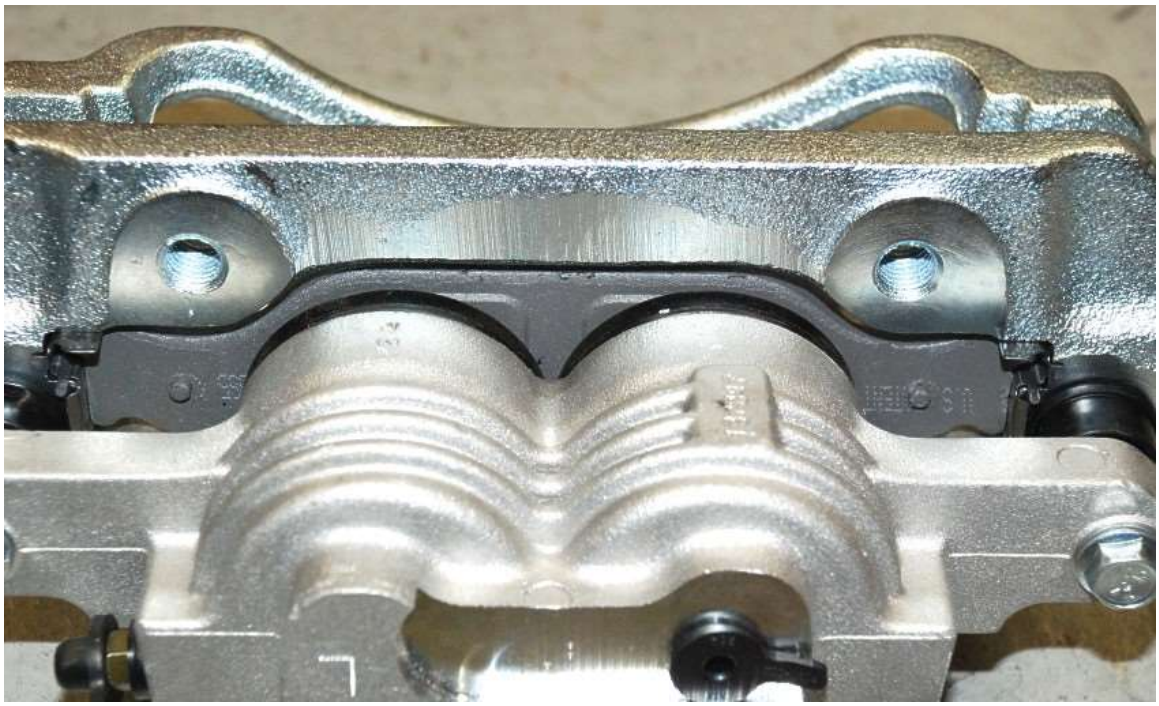

Install the brake pads in the Caliper.

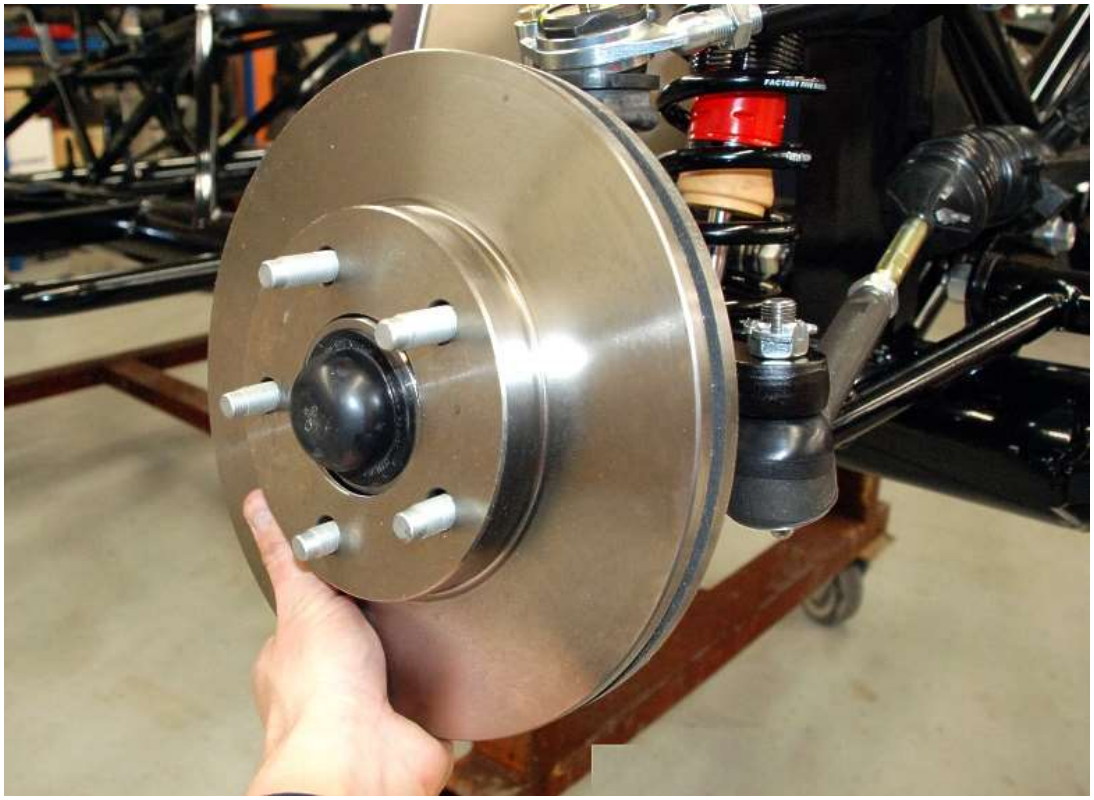

Clean the rotor with brake cleaner and push it onto the hub. Hold it in place with two lug nuts.

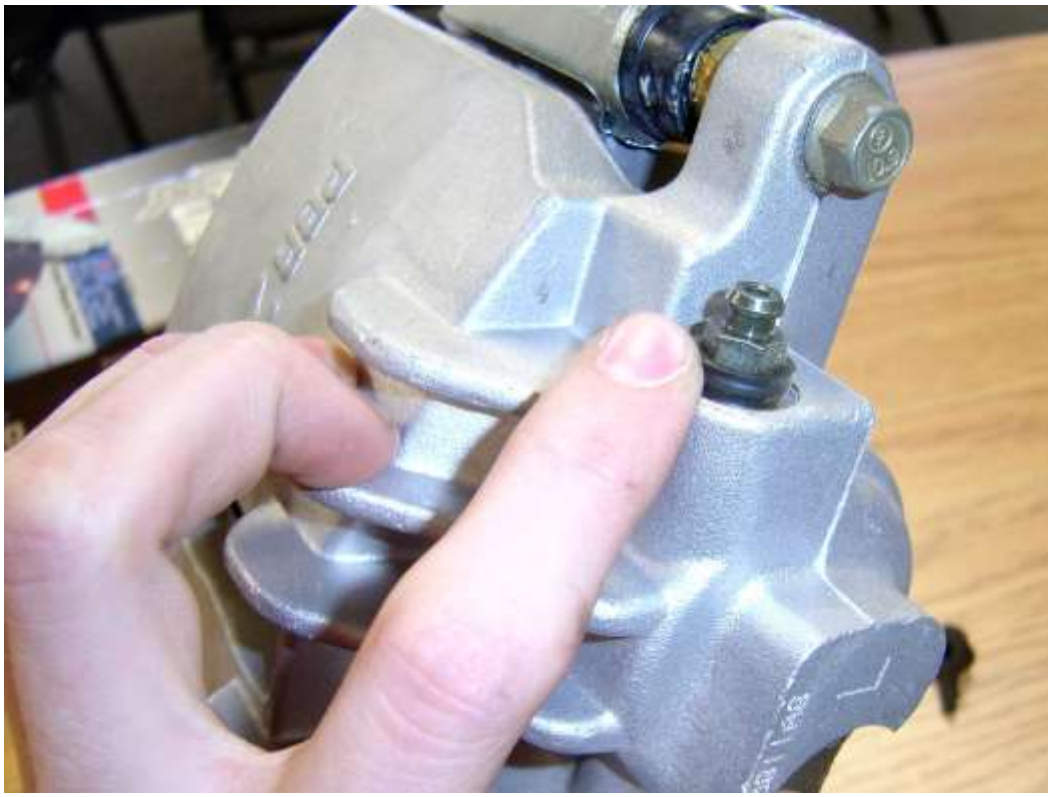

Install the caliper on the spindle; make sure that the fluid bleeder is at the top of the caliper; use the M12 x 35mm bolts packed with the spindles.

Torque the caliper mounting bolts to **130Nm (95 lb-ft)**.

Solid Axle Rear Suspension

✋ Skip to the Independent Rear suspension if not installing a Solid axle.

Two bolts are included with the control arms, the other two are included in the kit with the Traction Lok Brackets.

3-Link Fasteners

The 3-link kit packages all the fasteners together in one box.

17156	3-LINK DELUXE FASTENERS	1.00	EA
13976	1/2" WASHER	20.00	EA
10834	1/2"-13 NYLON LOCK NUT	11.00	EA
10833	1/2"-13 x 1.25" BOLT	8.00	EA
12385	1/2"-13 x 2.50" BOLT	1.00	EA
12332	1/2"-13 x 4" BOLT	2.00	EA
12218	1/2"-20 MECH LOCK NUT	6.00	EA
12217	1/2"-20 x 3" BOLT	6.00	EA
12380	3/4" JAM NUT, RH THREAD	1.00	EA
13166	3/4"-16 LFT HAND JAM NUT	2.00	EA
13977	3/8" WASHER	6.00	EA
13964	3/8"-16 NYLON LOCK NUT	4.00	EA
10520	3/8"-16 x 1" SOCKET HEAD	2.00	EA
60387	3/8"-16 x 2" SOCKET HEAD	2.00	EA
12387	5/8" WASHER	4.00	EA
15216	5/8"-11 MECH LOCK-NUT	4.00	EA
12382	5/8"-11 x 3" BOLT	4.00	EA
13212	5/8"-11 x 3.50" BOLT	1.00	EA
13751	M12 GRADE 10.9 LOCKNUT	2.00	EA
13706	M12 x 110MM BOLT	2.00	EA

Solid Axle Preparation

¾” sockets, ¾” wrench, ½” drill bit, drill, floor jack, jack stands, Torque Wrench

8.8” Rear axle assembly, Box 2 Solid axle Traction Lok brackets and rear control arms.

Use caution when working with the rear end assembly, it weighs 225 lbs.

Two bolts are included with the control arms, the other two are included in the kit with the Traction Lok Brackets.

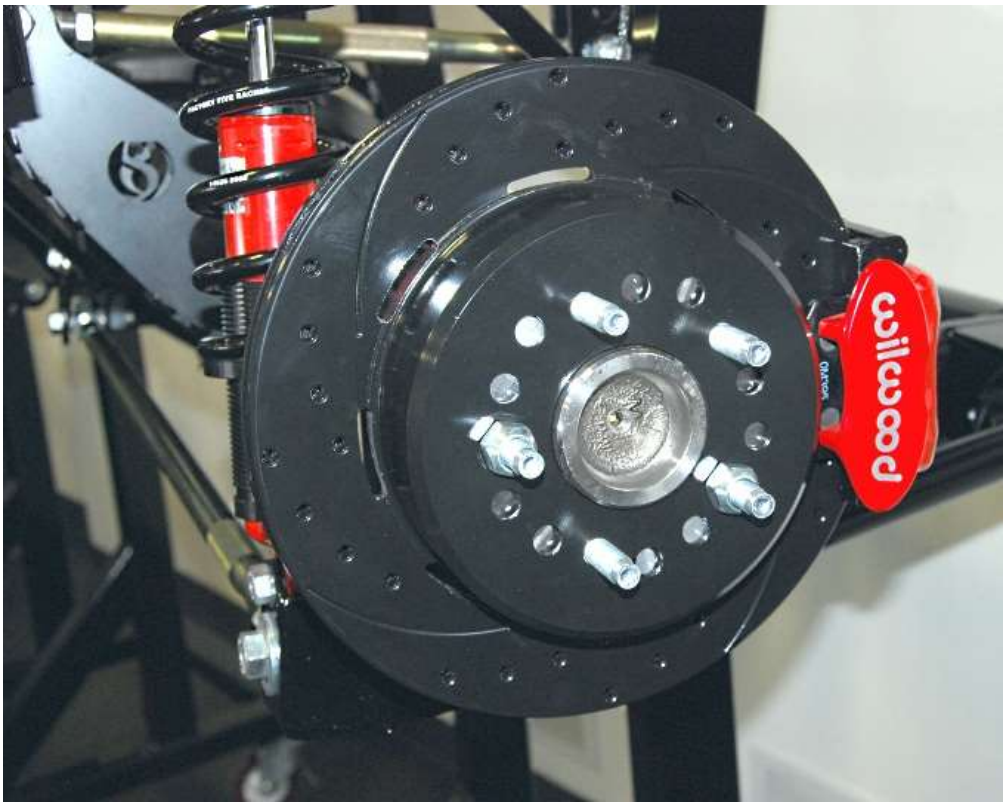

If not on the axle, attach the desired rear brakes to the axle.

✋ Check out the Appendix for the optional FFR brake install or www.factoryfiveparts.com for Wilwood brake options.

If not already done, fill the axle with gear oil. See Appendix for specifications and capacities.

If using a used rear axle, remove the lower shock mounts and the anti-vibration weight under the pinion.

Drill the lower control arm mount holes with a ½” drill bit.

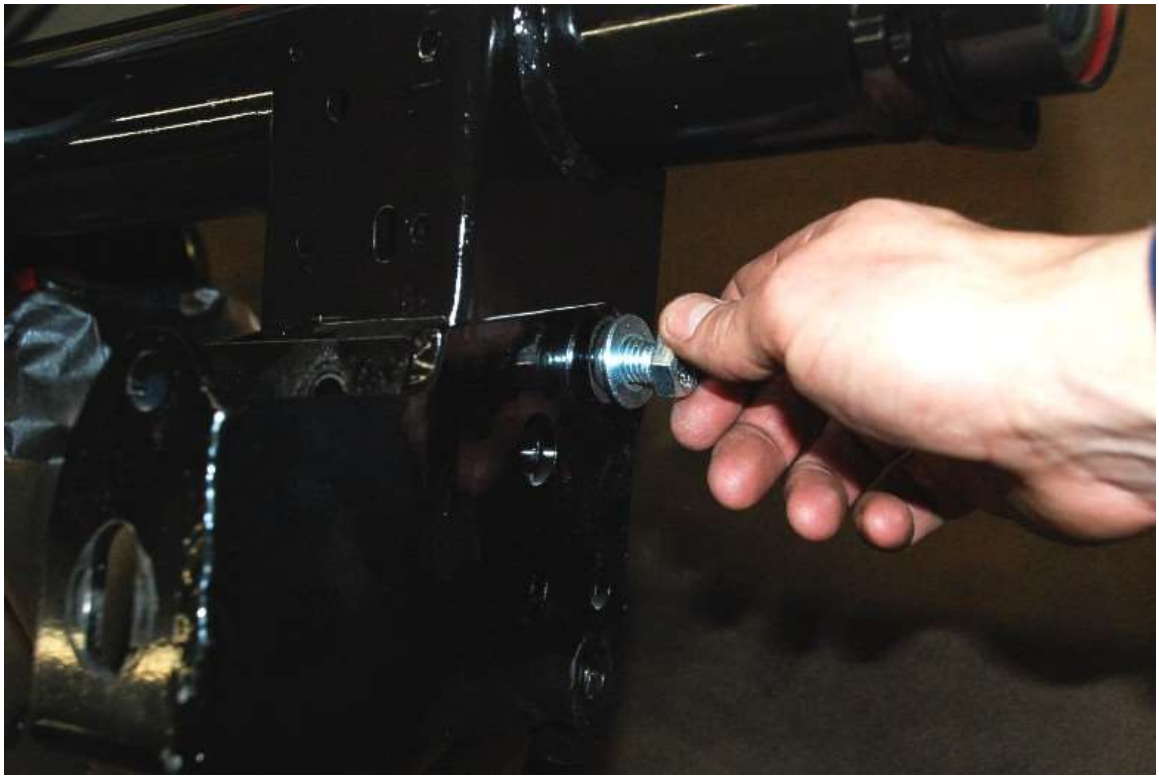

Position the Traction Lok brackets on the rear end with ½”x 1.25” bolts.

Axle Bracket left Side

Axle Bracket right Side

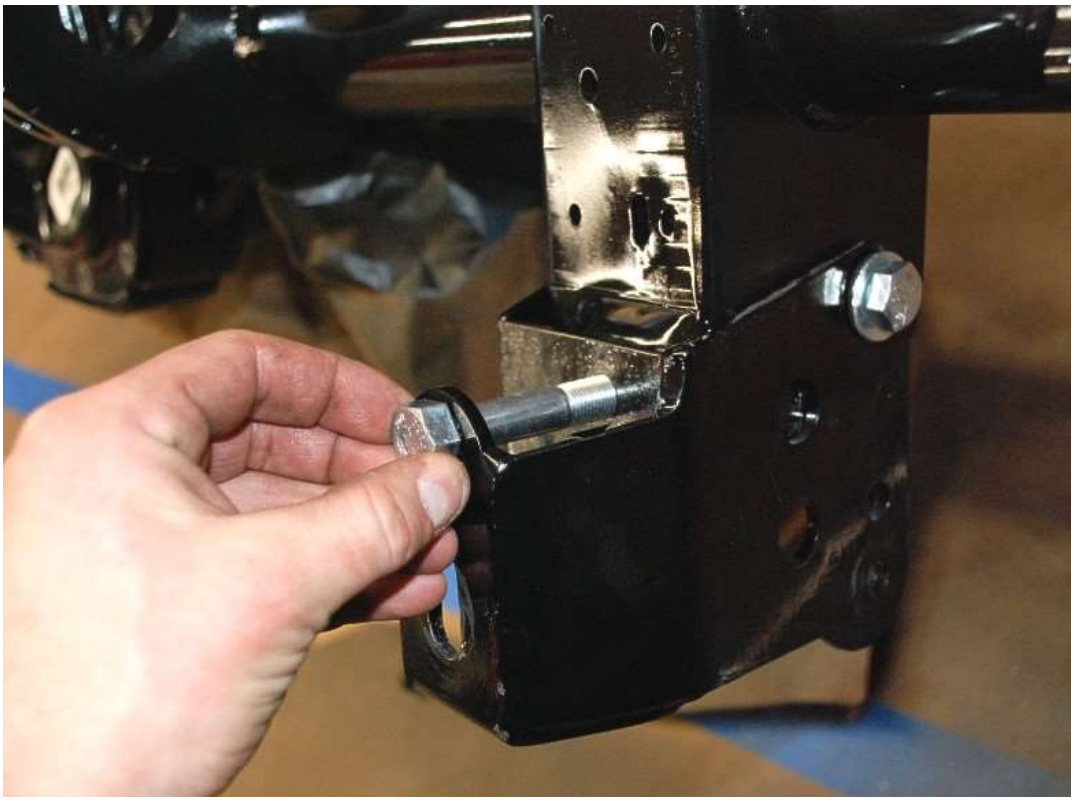

Temporarily put the lower shock bolt (½”x 3” bolt) through the traction lock bracket and stock shock hole on the axle.

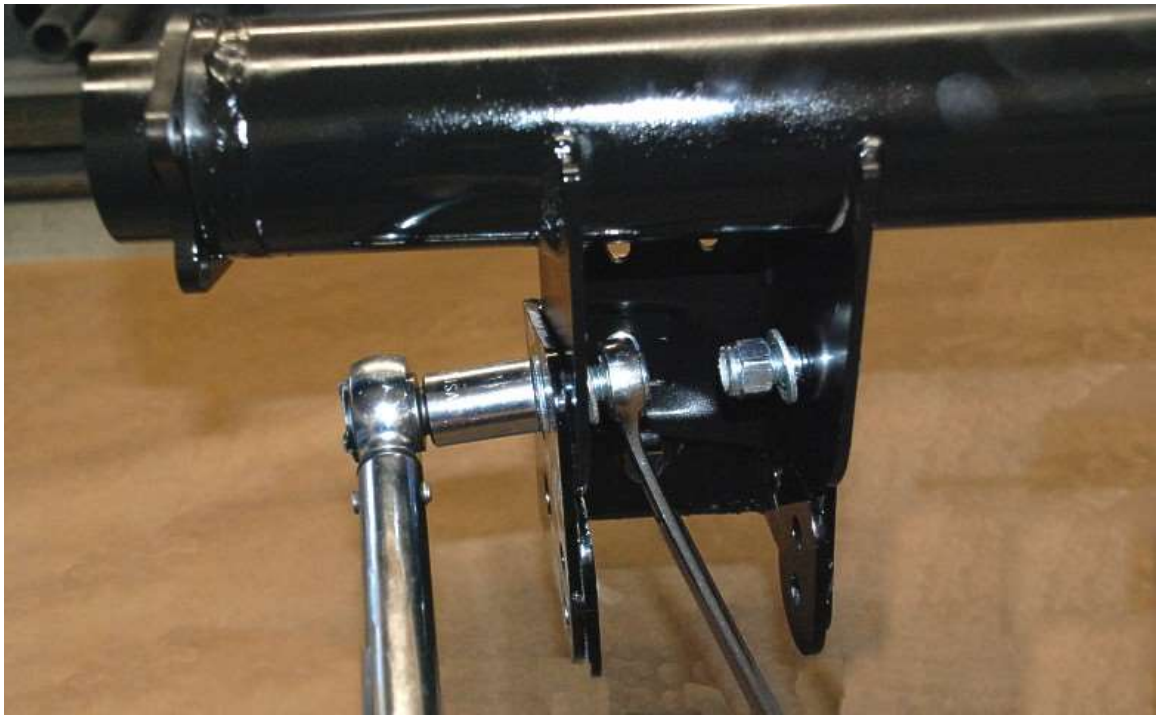

Tighten the two short bolts. Torque to Ford Specs 75-95 Nm (**55-70 lb-ft**).

Attach the lower control arms to the brackets on the axle using the M12 x 110mm bolt provided. Torque to 101-111Nm (**75-82 lb-ft**).

✋ The lower bolt holes provide more traction than the upper holes.

3 Link Rear Suspension

🛠 $^{3}/_{16}$”, ⅜”, ½” drill bits, ⅝”, ¾”, $15/_{16}$”, 1” wrenches, ⅜”, ⅝”, ¾”, $15/_{16}$” sockets, $5/_{16}$” Hex key, Ratchet, Torque Wrench, Drill, Ruler/Tape measure, Pliers, Flat head Screwdriver, Tin Snips/scissors/razor, Marker.

🚘 3-Link rear suspension (Box 2).

✋ The Panhard bar frame mount is mounted to the chassis during shipping

Upper Link Axle Mount

If using the FFR Moser axle skip to the next section since the upper link bracket is welded to the axle.

Test fit the two halves of the upper arm mount together. If it is hard to put all the bolts in the mount holes, put in as many as you can then use a ½" drill bit through the remaining bolt holes.

Attach the upper link bracket onto the axle using the fine hardware 12217 ½"-20 x 3" Hex head bolt and 12218 mechanical lock nuts.

The front attachment of the upper link axle mount attaches to the hole on the flange section of the pumpkin. This hole has some variance and may need to be drilled out from the bottom side using the mount as a guide.

Attach the front of the upper link axle mount to the front axle flange using the $^{3}/_{8}$" x 2" socket head cap screw and $^{3}/_{8}$" nylon lock nut.

Upper Link

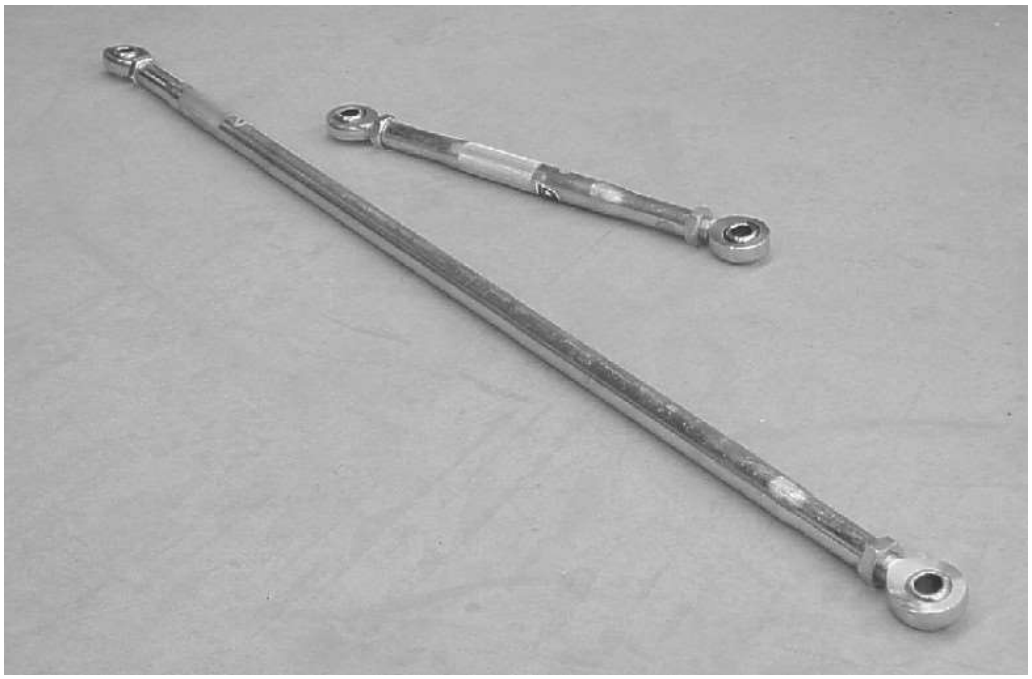

Install a jam nut on each of the rod ends, remembering that two of them are left hand thread.

Insert the rod ends into the swaged tubes (one is right hand thread and one is left hand thread). The longer tube is the Panhard bar and the shorter one is the upper link.

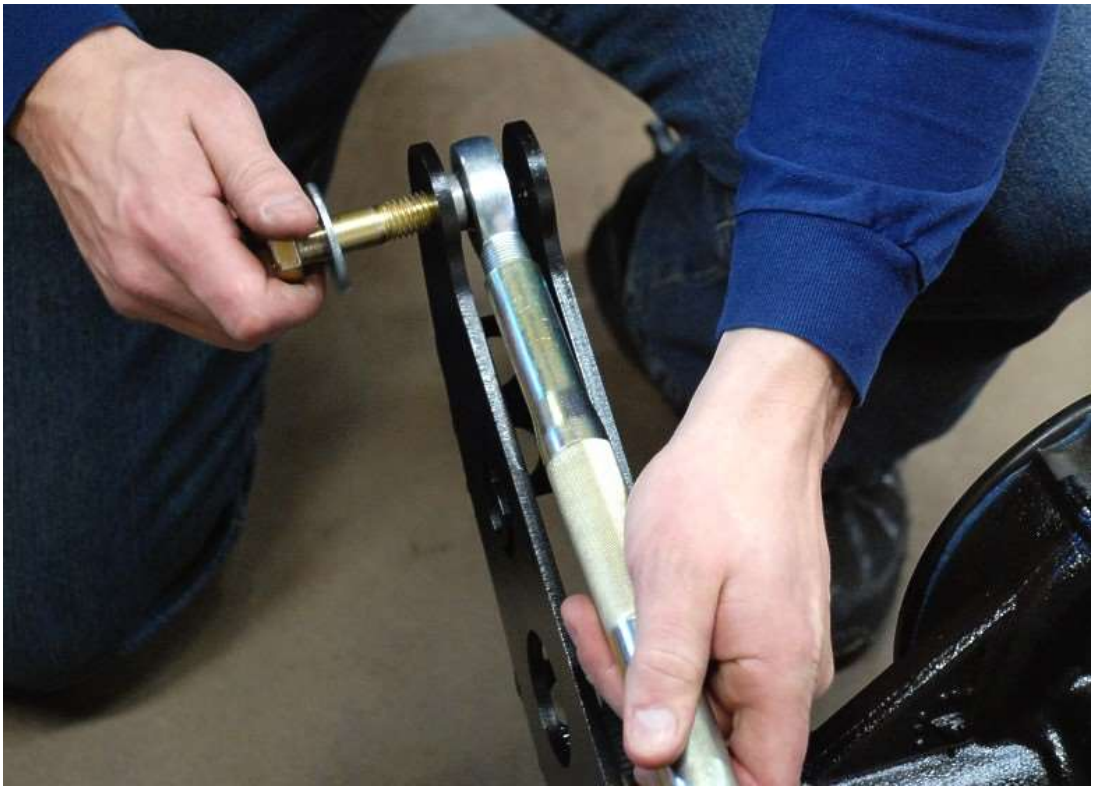

Attach the short upper link tube to the axle upper link mount using the ¼" spacers on either side of the rod end using a $^{5}/_{8}$"-11 x 3" hex head bolt and $^{5}/_{8}$" mechanical lock nut.

Rear Axle install

- Have someone help with this step, the rear axle is very heavy and mistakes can result in serious injury.

Use a floor jack to position the rear axle assembly under the frame.

- Make sure that the rear jack stands are positioned as far back as possible to prevent the frame from tipping up once the axle is mounted
- Do not hold the end of the axle from the bottom of the disc, if the axle falls, the axle can crush your fingers and result in serious injury.

With one person holding a side of the axle raise the axle so that the lower control arms can be bolted onto the frame.

Attach the lower control arms to the frame mounts using the M12 x 110mm bolts.

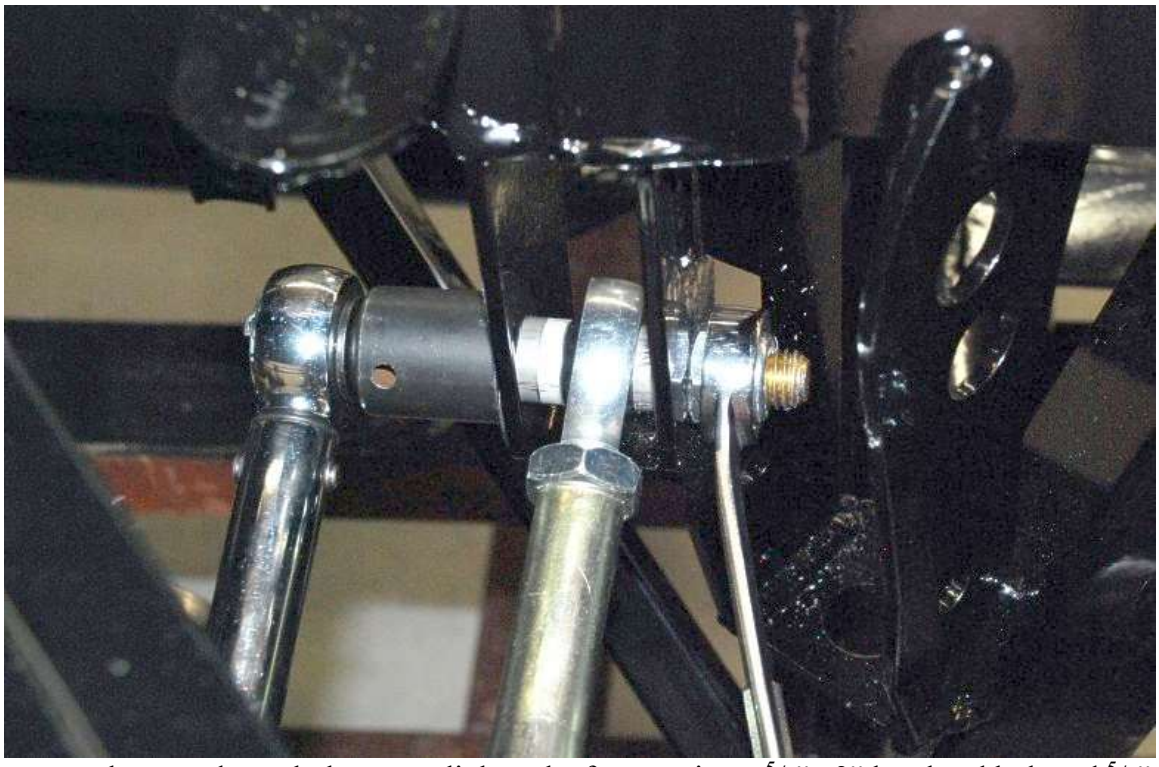

Jack the rear axle up and attach the upper link to the frame using a $^5/_8$"x 3" hex head bolt and $^5/_8$" mechanical locknut.

Panhard Bar Frame mount

- The Panhard bar frame mount is mounted to the chassis during shipping

Lower the rear axle.

- With the rear end correctly installed with the 3-link, the rear axle will rest on the 3-link Panhard bar mount with the suspension at full droop.

Rear Coil-Over Shock Assembly

- Snap ring pliers, ¾" wrench, ¾" socket, ratchet, ruler, marker, hack saw, chassis or lithium grease.
- Rear shock kit (Box 3), 1.09" spacers and fasteners (Box 2)
- The rear shocks are pre-valved at the factory in compression and rebound for good street use. The shocks can be adjusted in rebound as per Koni's instructions if so desired. The rear springs are 350lb. Other springs are available for different ride characteristics.
- Check the rebound setting on each shock. Although they usually come out of the box with rebound on the lowest setting (which is preferred with the standard spring rates) it is not unusual to find them set otherwise.
- WARNING! Incorrect assembly and maintenance of this part can cause serious injury or death.
- If using the Nickle plated shocks, these must be mounted with the body of the shock down.

Unpack the rear shocks, coil overs and hardware.

Double check the jam nut under the rod end and bump stop to make sure that it is tight.
Screw the spring seat down on the sleeve so it is closer to the unthreaded end. The center high part of the set should be pointed away from the unthreaded end.

Slide the coil sleeve over the body of the damper beginning at the end which has the rubber bump stop. The unthreaded end of the sleeve goes first so that it will sit on the snap ring on the shock body.

Place a small amount of white lithium or chassis grease on one side of the Delrin washer.

Put the Delrin spacer grease side down onto the spring seat on the threaded tube (shown without tube)

The coil-over hats have a snap ring which holds it in place. Remove this snap ring to assemble the coil over shock.

Slide the rubber bumper about two inches down on the shaft.

Put the spring on the shock, then install the spring hat on the shaft end of the shock and push the rubber bumper up against it.
Rotate the spring seat back up the sleeve so that the spring pushes the hat tight against the end of the shock.

Install the snap ring on the spring hat so that it holds onto the shock end. Make sure that the slot in the snap ring and the slot in the spring hat are not aligned.

Use zip ties to hold the spring to the spring hat.

Assembled solid axle Koni coil-over shock.

- If using the silver double adjustable shocks, these must be mounted with the body of the shock down in the top hole location.
- For the stock red Koni shocks, use the **lower** holes.

Attach the body end of the shock to the upper shock mount using the two equal length (1.09”) spacers, ½”-13 x 4” hex head bolt and ½” nylon locknut.

Jack the rear axle up so the rod end of the shocks can be mounted on the axle through the shock mount hole.

Right side

Left Side

Install the kit ½”-20 x 3” bolts are provided for each lower shock mount. From the rear, the bolt goes through the bracket, ⅛” shim, shock, then the long spacer (1.09”) followed by the bracket and axle. Use a ¾” socket and Torque wrench to tighten both upper and lower mounts to **40 lb-ft**.

- Check for shock clearance on brake lines, emergency brake cables, brake calipers, frame, and axle parts.
- Check to make sure that the spring is seated correctly on the shock.

Run zip ties through the holes in the spring hat and around the spring to prevent the spring from becoming unseated.

Panhard Bar

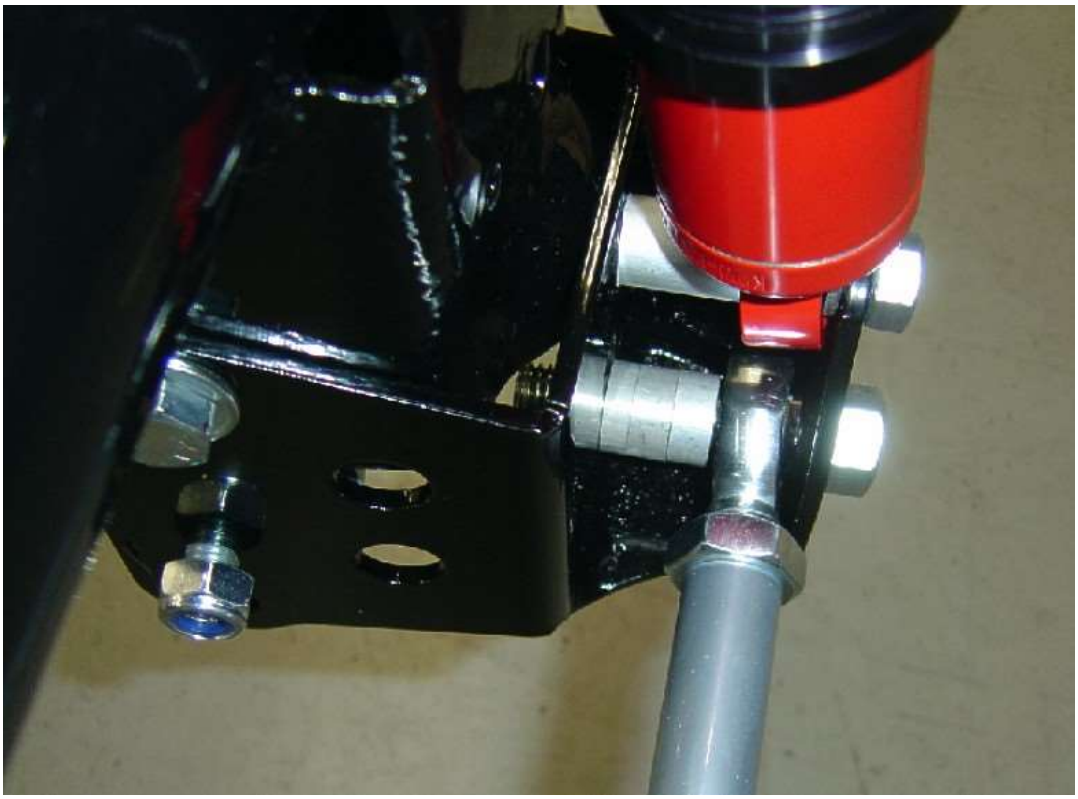

Attach the Panhard bar mounts using the 12382 ⅝”-11 x 3” bolts and spacers. Install the Panhard bar to the passenger side traction lock bracket. Three spacers are used in the front (2) 0.375" (FFR# 14064) and (1) 0.25" (FFR# 14065). The rear uses the thin 0.0625" shim (FFR# 13337). It will be necessary to adjust the length some to fit, make sure that you adjust the same amount on both sides. There should never be less than ¾” of threads screwed into either the Panhard bar or the upper arm.

Attach the Panhard bar to the frame mount using the spacers provided.

There should never be less than ¾” of threads screwed into either the Panhard bar or the upper arm.
To set the pinion angle, make sure that your ride height is where you want it, and then adjust the upper arm until the desired angle is reached. We run 2° up on the rear axle, but you can adjust this to fit your set-up.
The Panhard bar can center the axle left to right in the frame.
At ride height, level the Panhard bar as much as possible.
Double check all your nuts and bolts, and make sure that all four jam nuts are tight.

3 link Rear Suspension Torque Specs Chart

Item	Nm	lb-ft
Upper link to axle	101-111	75-82
Upper link to frame	101-111	75-82
Lower control arm to axle	101-111	75-82
Lower control arm to frame	101-111	75-82
Upper shock to frame	54-67	40-50
Lower shock to axle bracket	54-67	40-50
Panhard bar	101-111	75-82

If a 3-link was used, skip the next section on the IRS.

Optional Independent Rear Suspension

ITEM NO.	PART NUMBER	DESCRIPTION	QTY.
1	CENTER SECTION		1
2	LEFT SIDE SPINDLE		1
3	RIGHT SIDE SPINDLE		1
4	15857	ANGLED MOUNT ADAPTER	2
5	16239	7/8" MISALIGNMENT SPACER	2
6	15902	IRS TOE ADJUSTMENT ARM COMPONENTS	2
7	17759	COMPLETE LFT IRS LWR ARM	1
8	17760	COMPLETE RIGHT IRS LWR ARM	1
9	17761	IRS LEFT UPPER CONTROL ARM	1
10	17762	15898 - IRS RIGHT UPPER CNTRL ARM	1
11	KONI SHOCK ASSEMBLY	KONI IRS SHOCK	2

REVISIONS			
REV.	DESCRIPTION	DATE	APPROVED
A	INITIAL RELEASE	11/14/24	

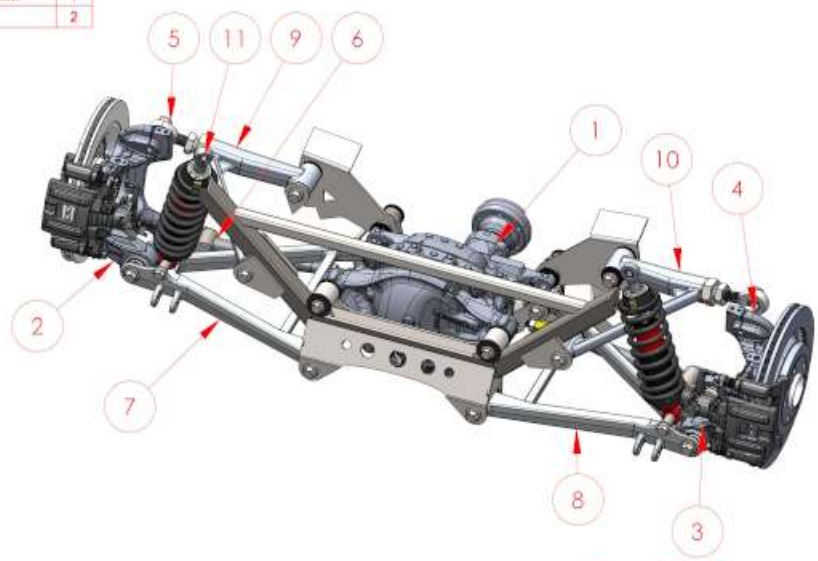

UNLESS OTHERWISE SPECIFIED:
DIMENSIONS ARE IN INCHES
TOLERANCES:
TWO PLACE DECIMAL ±0.01
THREE PLACE DECIMAL ±0.005
FOUR PLACE DECIMAL ±0.001

	NAME	DATE
DRAWN	JI	3/23/15
COMMENTS:		

Factory Five Racing, Inc.

TITLE: ROADSTER/COUPE IRS COMPONENTS

PROPRIETARY AND CONFIDENTIAL
THE INFORMATION CONTAINED IN THIS DRAWING IS THE SOLE PROPERTY OF FACTORY FIVE RACING, INC. ANY REPRODUCTION IN PART OR AS A WHOLE WITHOUT THE WRITTEN PERMISSION OF FACTORY FIVE RACING, INC. IS PROHIBITED.

MATERIAL
FINISH
USED ON
APPLICATION ROADSTER/COUPE
PRINTED 11/14/2024

SIZE A | DWG. NO. IRS Assembly | REV A
SCALE: 1:10 | WEIGHT: | SHEET 6 OF 6

🚗 IRS parts (Box 2), IRS arms (Box 45), CV axles (Box 44), coil-over shocks (Box 3)

🛠 Philips head screwdriver, $^{5}/_{8}$" Drill bit, $^{13}/_{16}$", $^{15}/_{16}$" wrenches, $^{13}/_{16}$", $^{15}/_{16}$" 18mm Sockets, Large adjustable wrench – up to $1^{5}/_{8}$", $^{1}/_{8}$" Hex Key, Marker, Ruler, Hacksaw, Drill, Plastic mallet, Hammer, Torque wrench

Parts needed

2015 or newer Ford Mustang IRS parts

- Super 8.8" center section
- Spindles
- Brake parts

IRS Fasteners

✋ The IRS kit packages all the fasteners together in one box.

17157	IRS FASTENERS	1.00	EA
10834	1/2"-13 NYLON LOCK NUT	4.00	EA
12386	1/2"-13 x 3.25" BOLT	2.00	EA
12332	1/2"-13 x 4" BOLT	2.00	EA

13166	3/4"-16 LFT HAND JAM NUT	2.00	EA
12387	5/8" WASHER	2.00	EA
15216	5/8"-11 MECH LOCK-NUT	4.00	EA
15937	5/8"-11 x 2.25" BOLT	2.00	EA
16242	5/8"-11 x 4.25" BOLT	2.00	EA
16040	M10 x 20MM SOCKET HEAD	4.00	EA
15961	M10 x 25MM SOCKET HEAD	10.00	EA
14759	M14-2.0 FLANGED LOCK NUT	2.00	EA
15962	M14-2.0 x 100MM FLNG HEAD	2.00	EA
15936	M14-2.0 x 80MM FLNG HEAD	2.00	EA
14925	M16-2.0 x 110MM FLNG HEAD	8.00	EA
15963	M16-2.0 x 130MM FLNG HEAD	2.00	EA
15909	M16-2.0 x 90MM FLNG HEAD	2.00	EA
14515	M16-2.0MM FLANGED LOCK NUT	12.00	EA

Parts preparation

Spindles

🛠 $^{5}/_{8}$" drill bit, drill, saw with course metal blade, marker
🚗 2015+ Mustang Spindles

Remove the brake calipers from the spindle if they are mounted. They will be reinstalled after the spindle is put on the car.

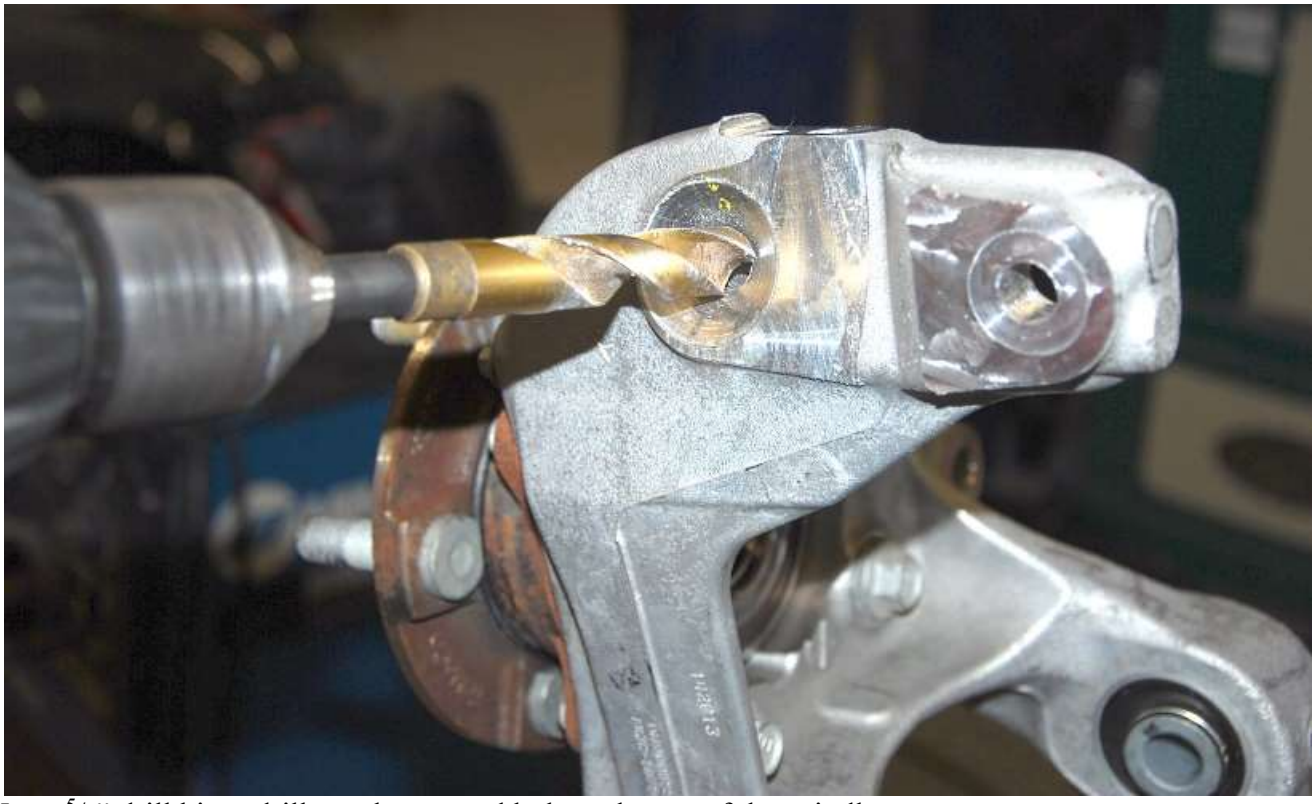

Use a $^{5}/_{8}$" drill bit to drill out the tapered hole at the top of the spindle.

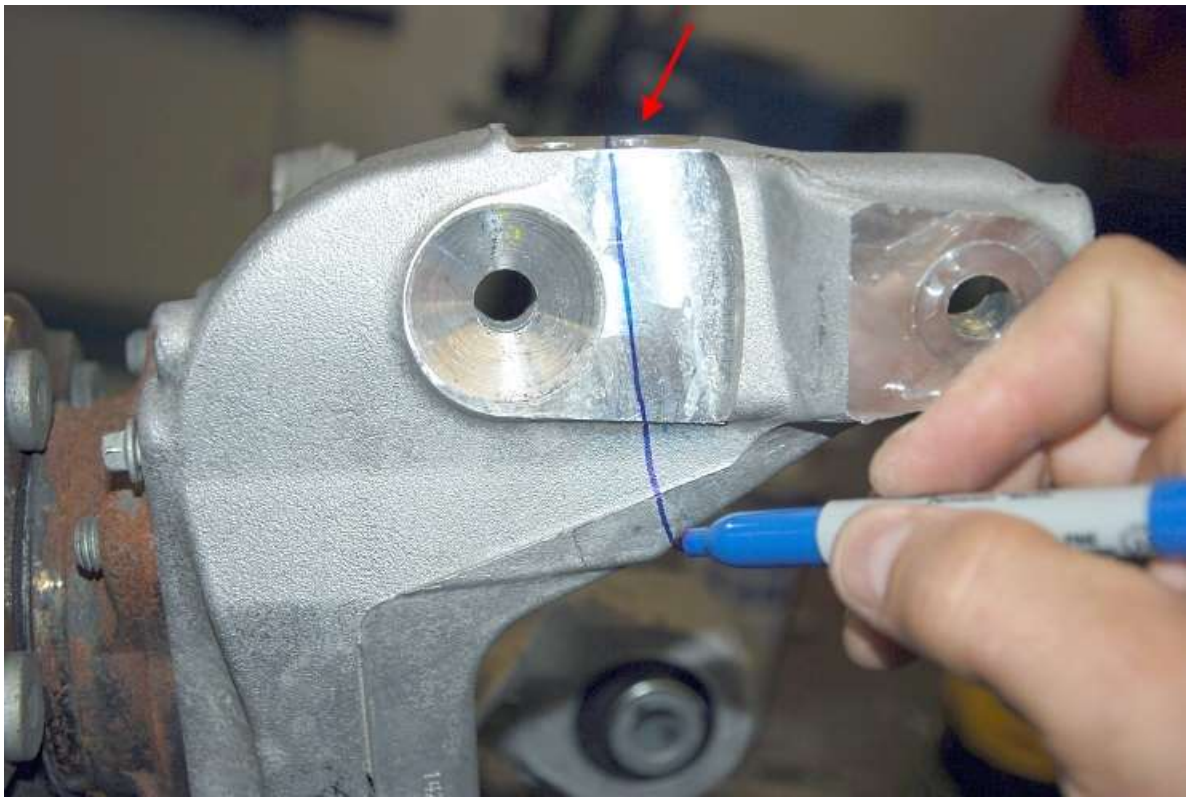

Mark the spindle starting at the top just to the inside of the top inside hole down to the corner of the small boss at the bottom of the ear.

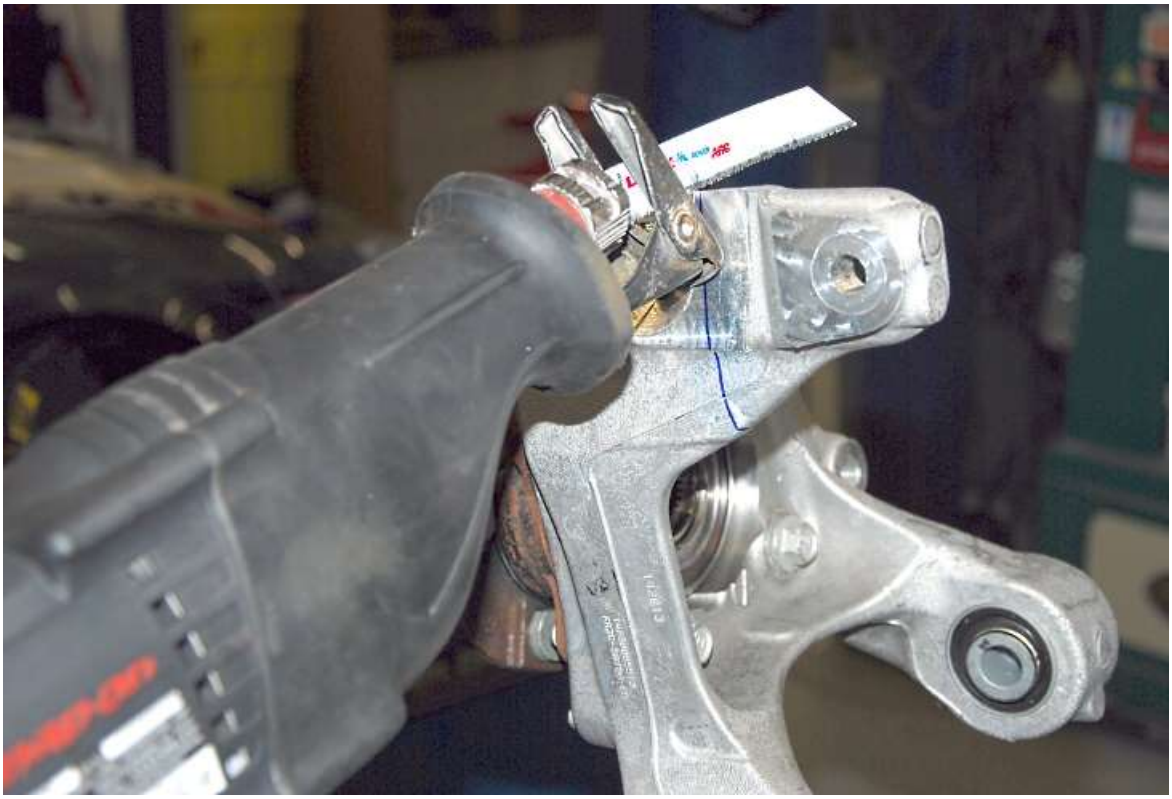

Use a saw to cut the ear off the spindle. If using a Sawzall or similar, use a wood blade; a 14tpi blade or finer will just get gummed up with the aluminum.

Hubs

🛠 Hammer, vise, ratchet, ½”-20 lugnut, torque wrench.

Box 2 Rear wheel studs.
Removal of the hub from the spindle is not necessary but can make things easier.

Use a vise to lightly hold the side of the wheel stud head then use a hammer to bang out the Mustang studs. Repeat for all the studs.

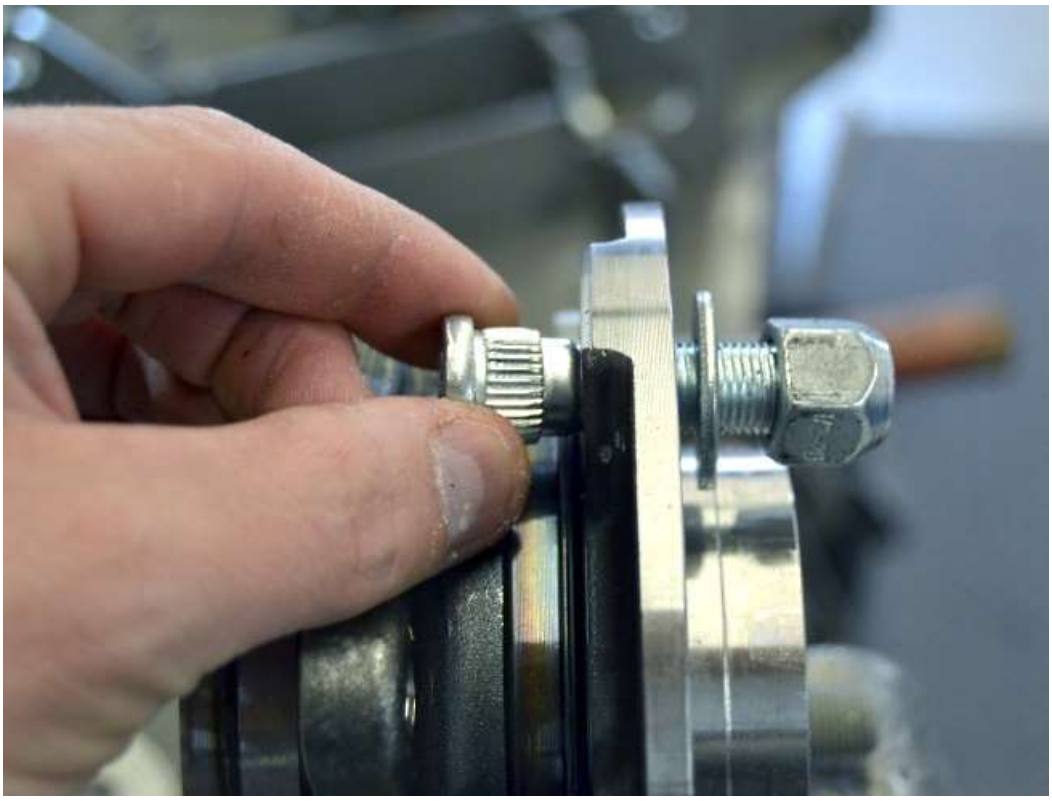

Insert one of the included wheel studs into the hub from the back and use a washer and lug nut on the front side.

✋ Put a little lubricant such as WD-40 or similar on the splines and on the washer under the lug nut to ease install.

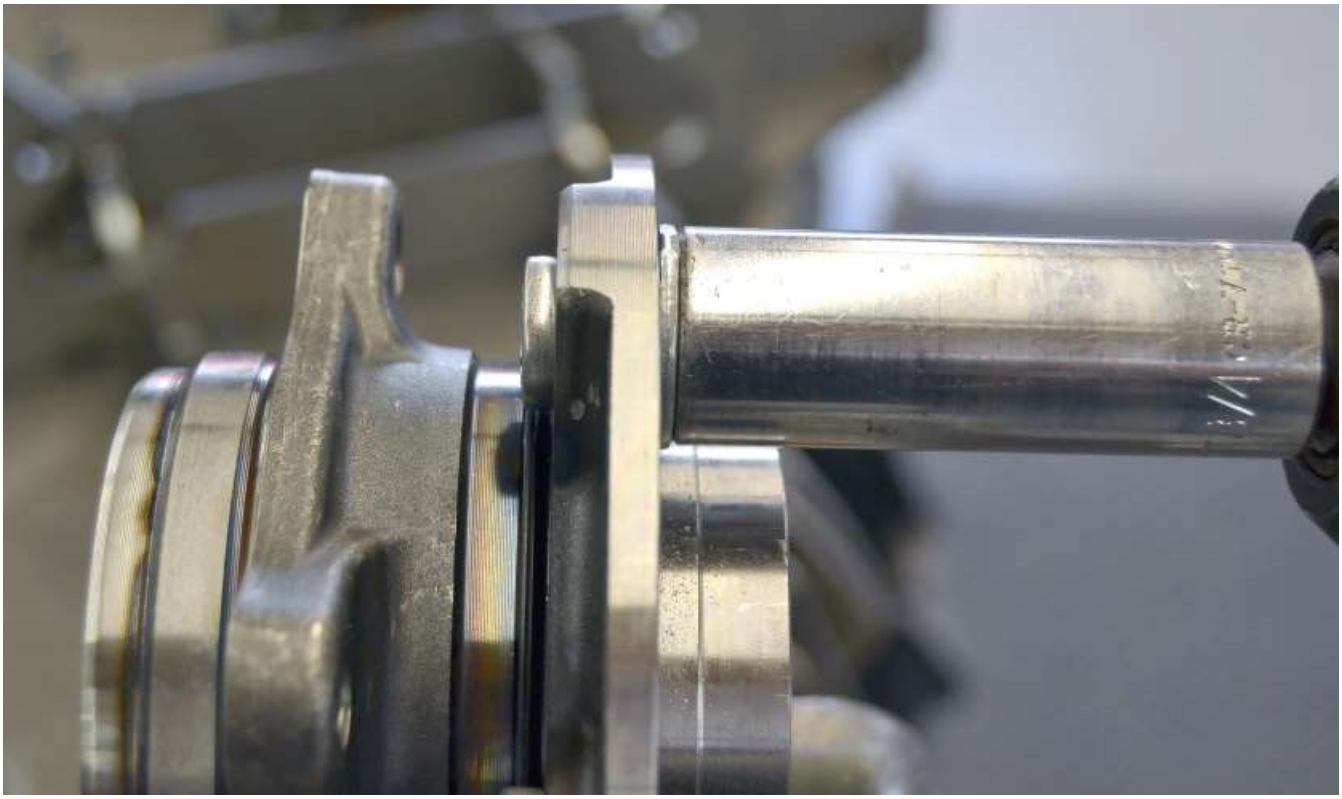

Use a ratchet to draw the wheel stud into the hub and torque the stud to **135Nm (100lb-ft)**.

Repeat for the other wheel studs.

If the Hub was removed, use Loctite on the threads and reattach to the spindle.

Torque the bolts to **133Nm (98 lb-ft)**.

Center section

🛠 $^{5}/_{8}$" drill bit, drill.

Use a $^{5}/_{8}$" drill bit to chase the front mount holes on the center section.

Frame

🛠 Rubber/plastic mallet
🚘 Differential mounting components (Box 2)

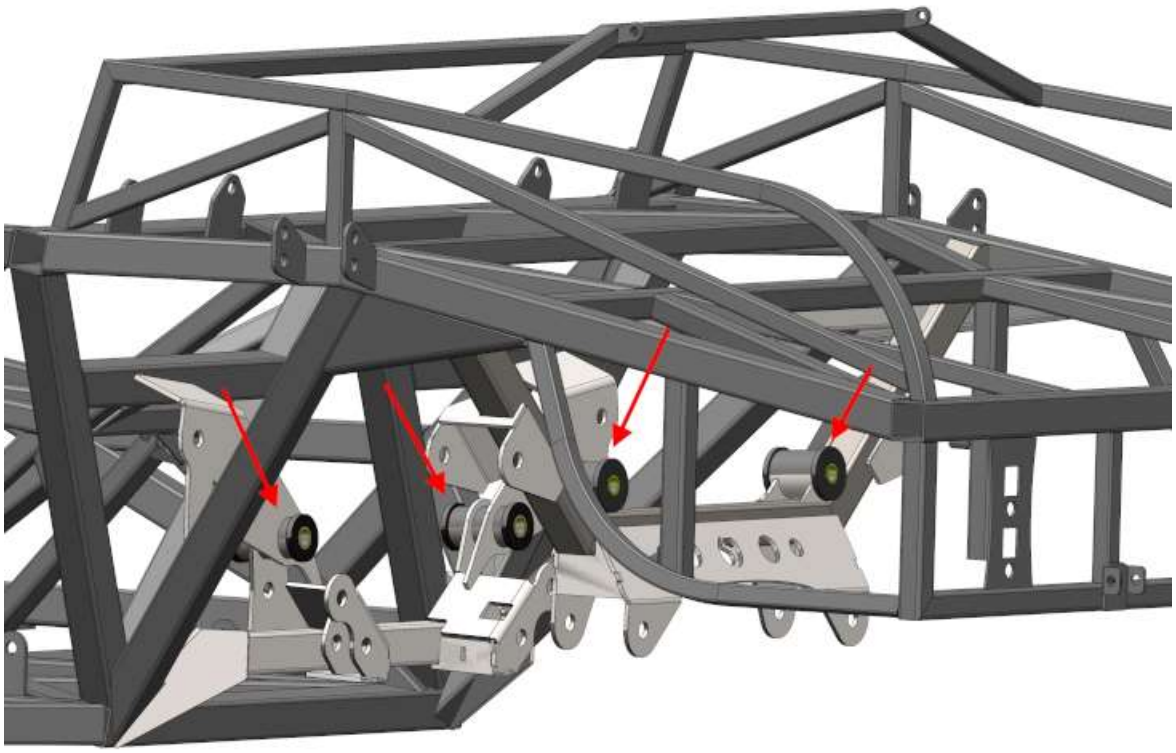

Bushing locations.

Use a plastic mallet to install the polyurethane bushings marked 2048 and the longer ($3^{1}/_{16}$") sleeves where the front of the center section will mount.

Use a plastic mallet to install the polyurethane bushings marked 2123 and the shorter (2.40”) sleeves where the rear of the center section will mount.

Upper control arms

🚘 Box 2 Upper control arm components
🛠 Grease gun

ITEM NO.	PART NUMBER	DESCRIPTION	QTY.
1	15890	7/8"-14 LH THREAD ROD END	1
2	15900	7/8" LEFT HAND JAM NUT	1
3	70193	1.25"-12 JAM NUT, RH THREAD	1
4	17270	LEFT FORGED UPPER IRS ARM	1
5	15889	7/8"-1.25" ADJUSTER BUNG	1
6	12257	PIVOT SLEEVE	2
7	13137	POLYURETHANE BUSHING	4
8	12228	GREASE FITTING	2

REV.	REVISIONS DESCRIPTION	DATE	APPROVED
A	INITIAL RELEASE	11/15/24	

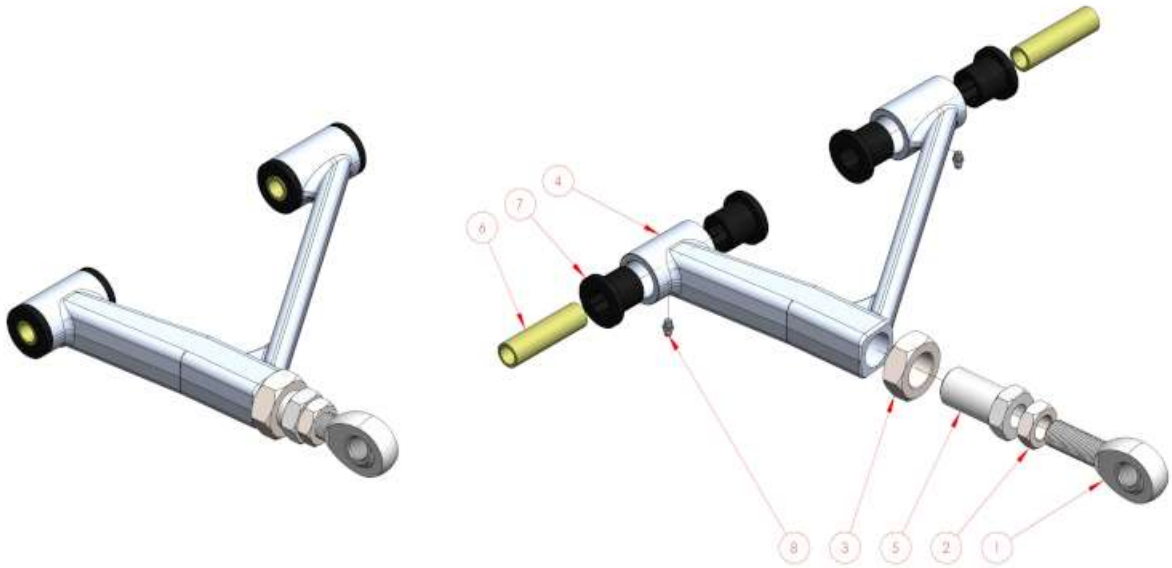

ROADSTER
COUPE

UNLESS OTHERWISE SPECIFIED:
DIMENSIONS ARE IN INCHES
TOLERANCES:
TWO PLACE DECIMAL ±0.01
THREE PLACE DECIMAL ±0.005
FOUR PLACE DECIMAL ±0.001

	NAME	DATE
DRAWN	JI	11/15/24

COMMENTS:

Factory Five Racing, Inc.

TITLE:
17761 - IRS LEFT UPPER CONTROL ARM

MATERIAL
FINISH

USED ON
APPLICATION
IRS

PRINTED 11/15/2024

SIZE A | DWG. NO. REAR UPPER ARM | REV A

SCALE: 1:4 | WEIGHT: | SHEET 1 OF 1

PROPRIETARY AND CONFIDENTIAL
THE INFORMATION CONTAINED IN THIS DRAWING IS THE SOLE PROPERTY OF FACTORY FIVE RACING, INC. ANY REPRODUCTION IN PART OR AS A WHOLE WITHOUT THE WRITTEN PERMISSION OF FACTORY FIVE RACING, INC. IS PROHIBITED.

Assemble each of the upper control arms as shown.

Grease the control arms using chassis grease until the grease comes out of the flutes in the bushings next to the pivot sleeves.

Lower control arms

🛠 Grease gun

Grease the control arms using chassis grease until the grease comes out of the flutes in the bushings next to the pivot sleeves.

Toe adjustment arms

ITEM NO.	PART NUMBER	DESCRIPTION	QTY.
1	33388 - LINKAGE ADJUSTER	LINKAGE ADJUSTER	1
2	12348 3-4 ROD END BODY	12348 - 3/4"-16 THREAD x 5/8" BORE ROD END	1
3	HJNUT 0.7500-16-D-N		2
4	15903	IRS TOE ARM	1
5	B18.2.3.4M - Hex flange screw, M14 x 2.0 x 80 – 34N		1
6	HNUT 0.6250-11-D-N	15936	1
7	HHBOLT 0.6250-11x2.5x1.25-N	15216	1
8	AM-M14-N		1
9	33240	14759 0.25" SPACER	1
10	15908	0.25" SPACER	1

REVISIONS			
REV.	DESCRIPTION	DATE	APPROVED
A	INITIAL RELEASE	1/23/15	

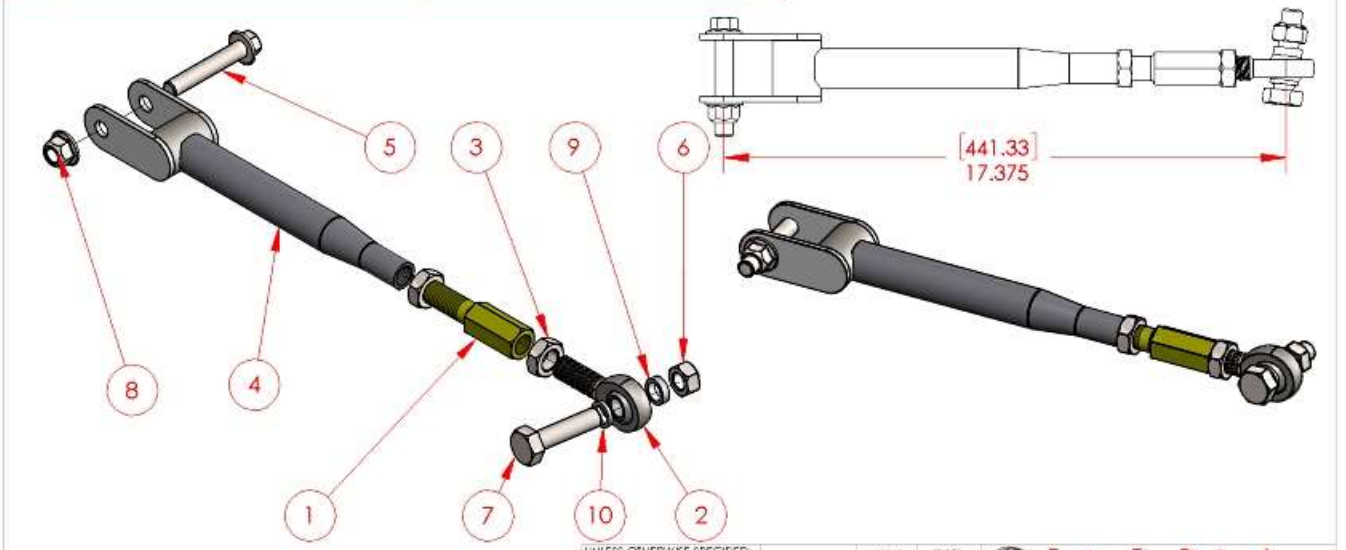

ROADSTER
COUPE

UNLESS OTHERWISE SPECIFIED:
DIMENSIONS ARE IN INCHES
TOLERANCES:
TWO PLACE DECIMAL ±0.01
THREE PLACE DECIMAL ±0.005
FOUR PLACE DECIMAL ±0.001

	NAME	DATE
DRAWN	JI	1/6/15

COMMENTS:

Factory Five Racing, Inc.

TITLE:
IRS TOE ADJUSTMENT ARM COMPONENT

MATERIAL
FINISH

USED ON
APPLICATION 2015 IRS

PRINTED 2/5/2019

SIZE	DWG. NO.	REV
A	15902	A

SCALE: 1:4 WEIGHT: SHEET 1 OF 1

PROPRIETARY AND CONFIDENTIAL
THE INFORMATION CONTAINED IN THIS DRAWING IS THE SOLE PROPERTY OF FACTORY FIVE RACING, INC. ANY REPRODUCTION IN PART OR AS A WHOLE WITHOUT THE WRITTEN PERMISSION OF FACTORY FIVE RACING, INC. IS PROHIBITED.

Assemble each of the toe adjustment arms as shown. Rough alignment length shown.

Installation

Center section

🛠 Rubber/plastic mallet, torque wrench, 18mm, $^{13}/_{16}$" sockets, $^{15}/_{16}$" wrench.

🚘 Box 2 Fasteners.

✋ Use a friend to help with the heavy center section in the next steps.

✋ The vent nipple is usually taped to the inside of the box.

Use rags to protect between the front center section mount on the frame.

With the help of a friend, lift the center section nose up into the frame and over the front mount.

Flatten the center section out so it is horizontal then back it up so it is above the mount locations and lower it down so the bolts can be installed. The 15962 M14 x 100 bolts are used for the rear mounts.

The larger/longer 15963 M16 x 130 bolts and 14515 flanged nuts are used for the front mounts.

Torque both the front and rear bolts to **135Nm (100 lb-ft)**.

Center section Vent

🛠 Pliers, wire cutters, hammer
🚘 Vent hose, vent nipple, insulated clips, secondary body fasteners.

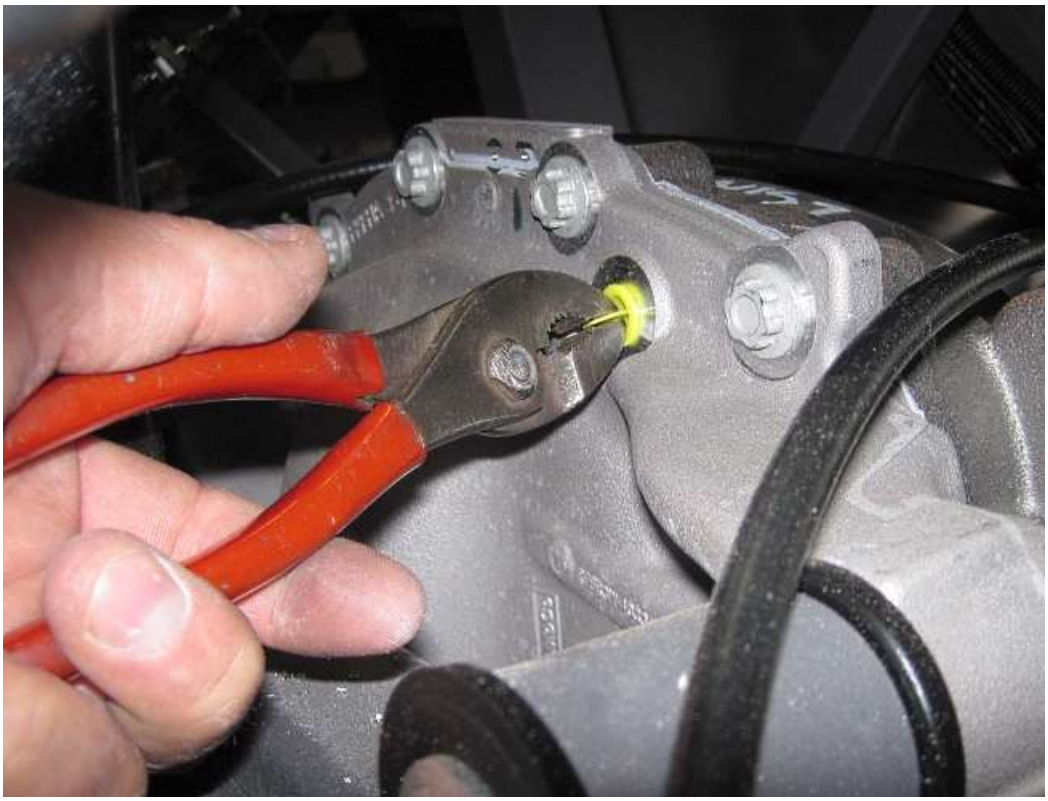

Remove the plug at the top of the rear cover.

Use a hammer on the end of the barb to put the nipple in the rear cover.

Push the 12.00” piece of $^{5}/_{16}$” fuel hose onto the barb.

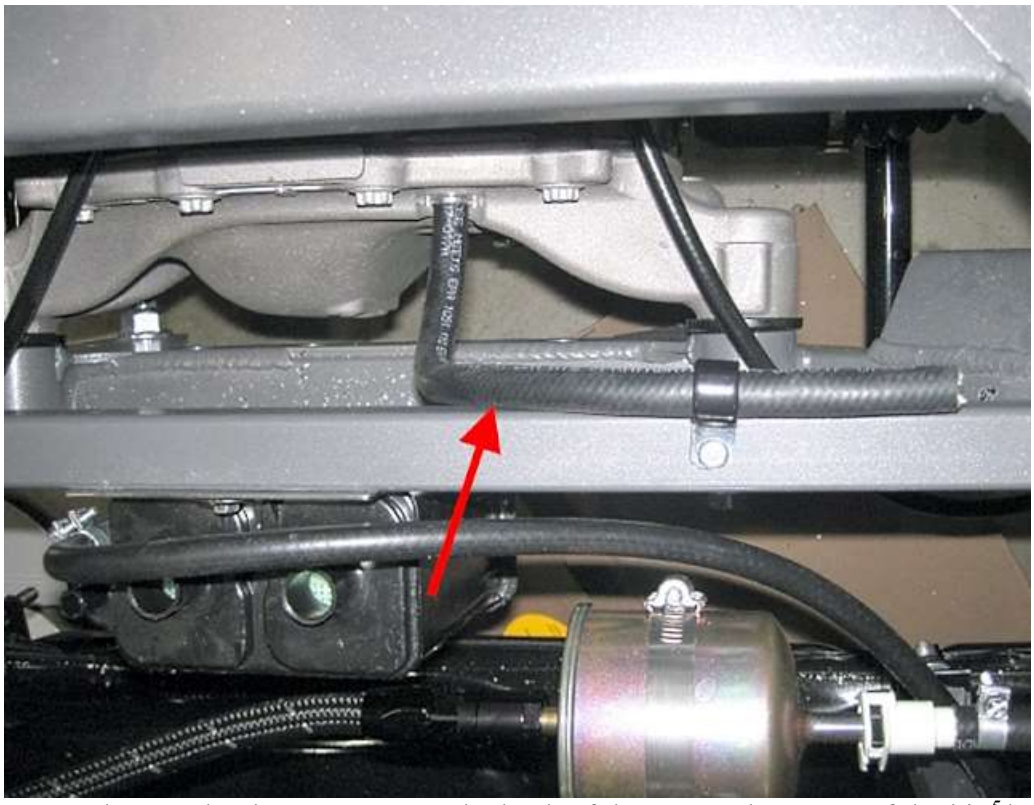

Run the hose up to the 1” tube that goes across the back of the IRS and use one of the kit $^{5}/_{8}$” insulated clips and $^{3}/_{16}$” rivet to hold it in place.

Toe Adjustment arms

🚗 IRS Toe arms

🛠 $^{13}/_{16}$” socket, $^{15}/_{16}$” wrench, torque wrench.

If using the sway bar option, pass the bolt through the frame mount bracket when installing the toe arms.

Attach the toe arms to the frame below the front lower arm mount using the $^{1}/_{8}$" thick spacer in the back and the ¼" spacer on the front side of the rod end. Use the $^{5}/_{8}$" x 2.25" bolts to attach them to the frame.

Torque bolts to 135Nm (100 lb-ft).

Lower control arms

IRS lower control arm components

$^{13}/_{16}$" socket, $^{15}/_{16}$" wrench, torque wrench.

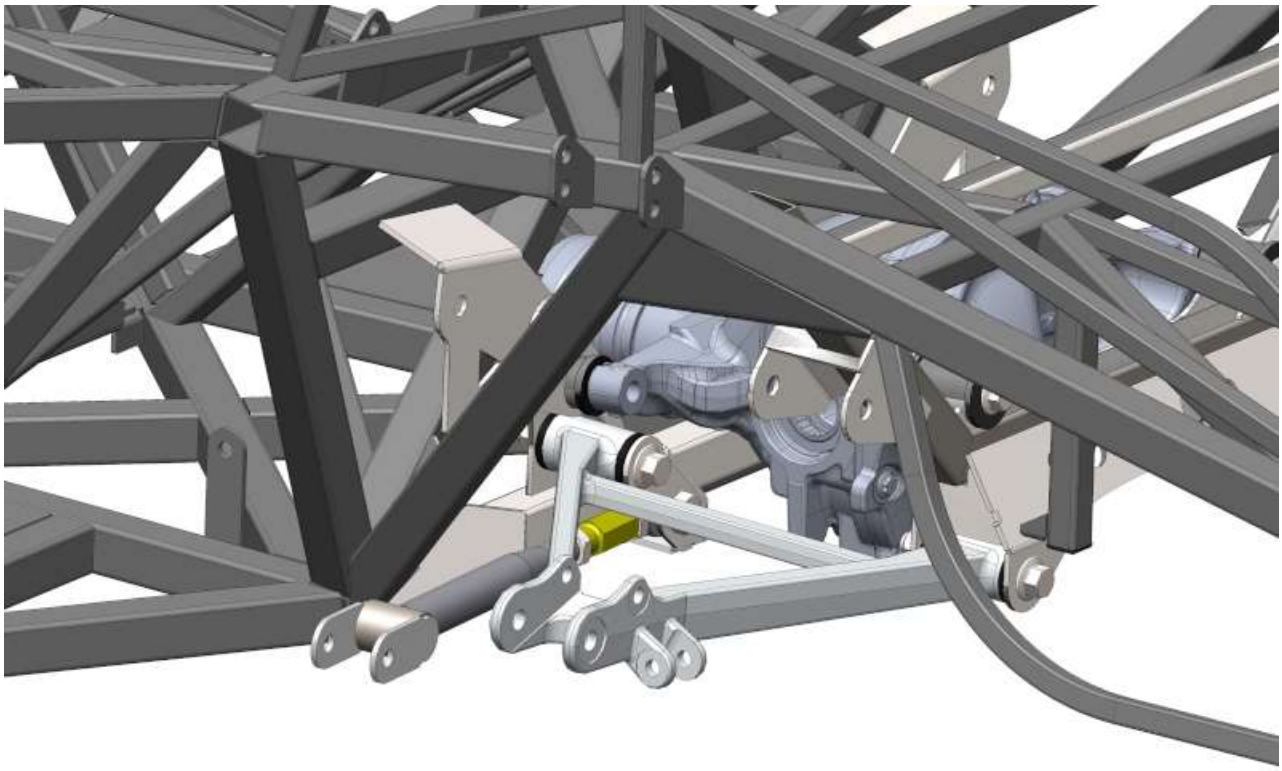

Attach the control arms to the frame with the shock mount towards the rear and spindle brackets up. Use the longer M16 x 110mm (~$4^5/_{16}$") bolts.

Hold the arm horizontal and torque the bolts to **135Nm (100 lb-ft)**.

Upper control arms

🚘 IRS upper control arm components
🛠 $^{13}/_{16}$" socket, $^{15}/_{16}$" wrench, torque wrench.

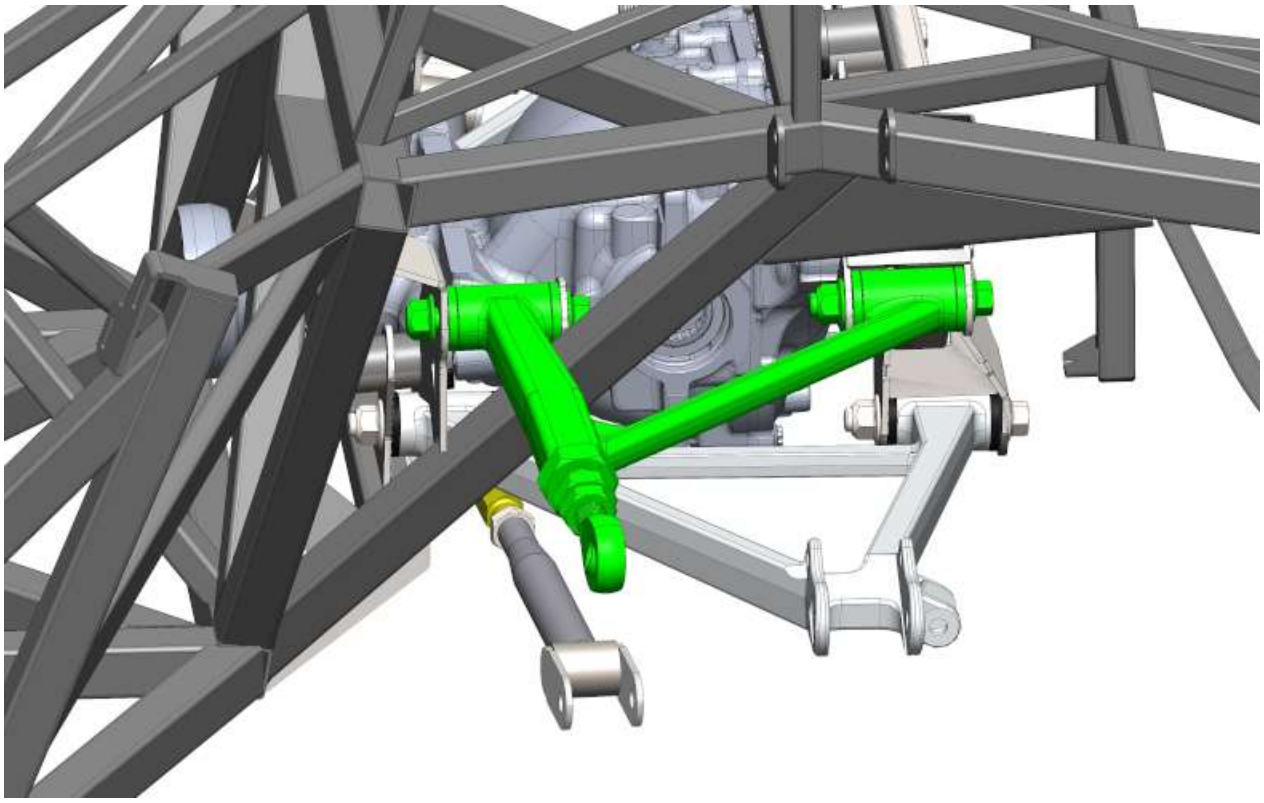

With the grease nipple pointed down, pass the upper control arm thick tube through the triangular area as shown in between the frame mounts. Use the longer M16 x 110mm (~$4^5/_{16}$") bolts.

Hold the arm horizontal and torque the bolts to **135Nm (100 lb-ft)**.

CV Axle

CV Axles, spindles

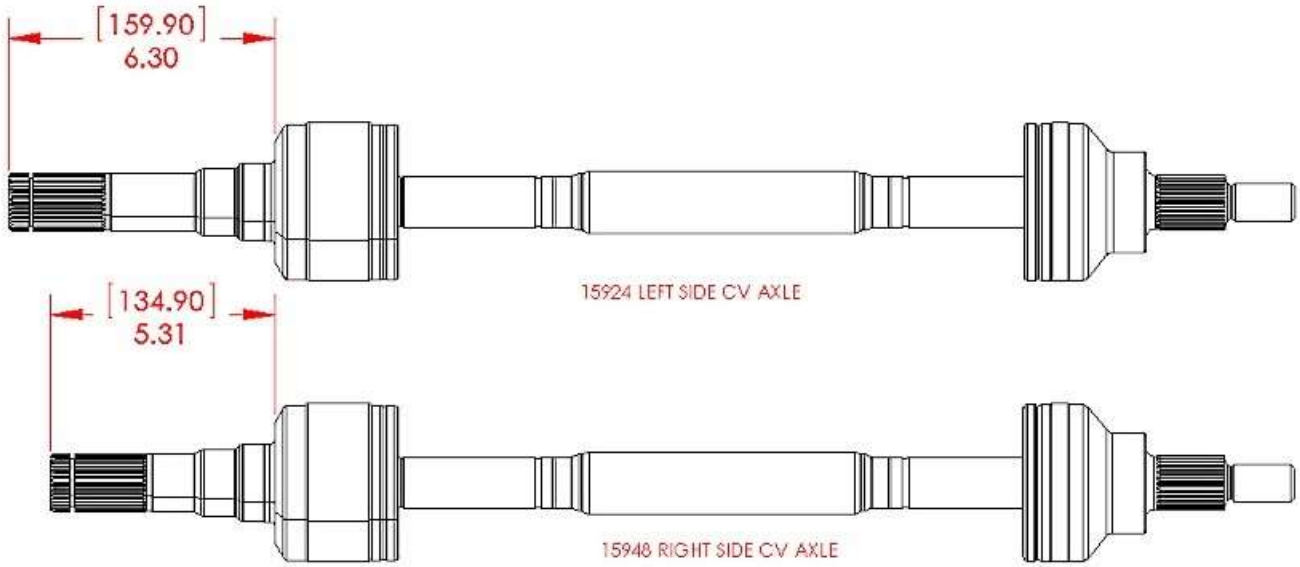

The inside CV joint is different for each side of the car, make sure to use the correct one when installing.

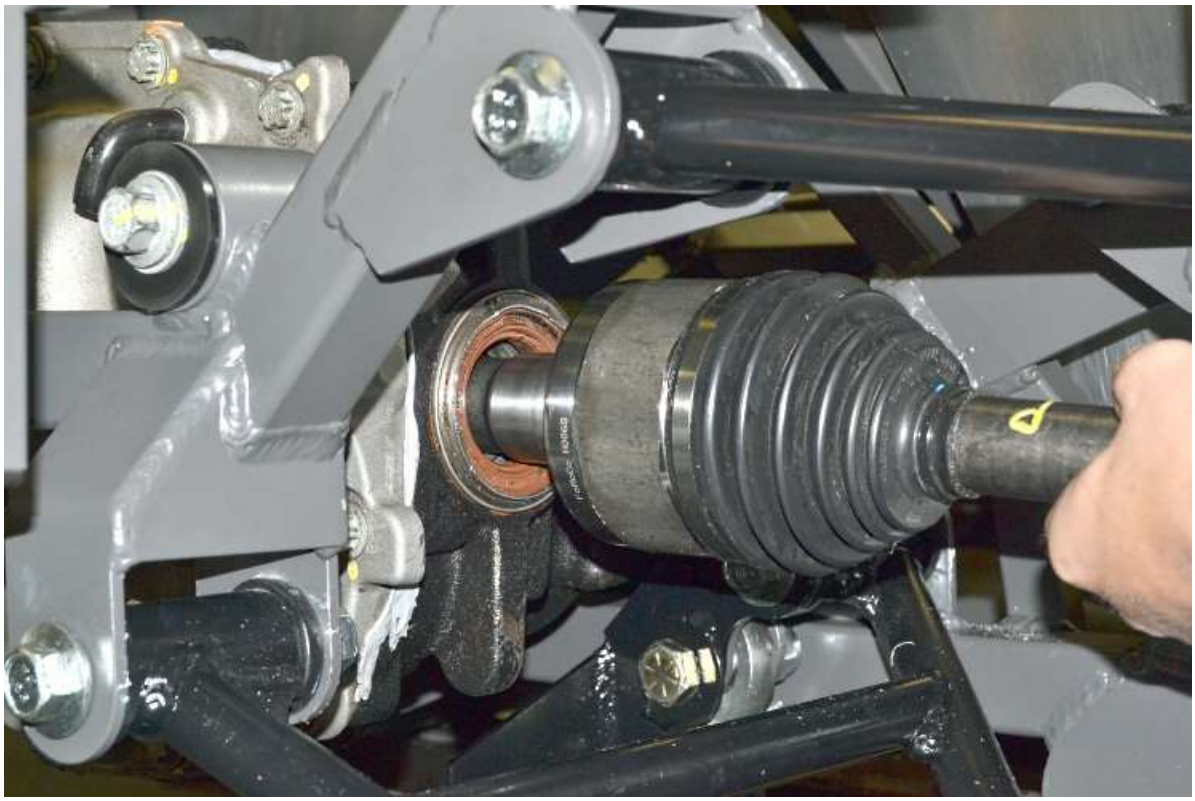

Using the correct axle, push the inner CV joint into the center section.

✋ When fully installed there should be an $^{1}/_{8}$" (~3mm) gap between the inside of the CV joint and the center section. If necessary, compress the CV axle and with the CV axle nut on the end hit the CV axle in with a plastic mallet. Pull on the inner CV joint to make sure that it does not come out.

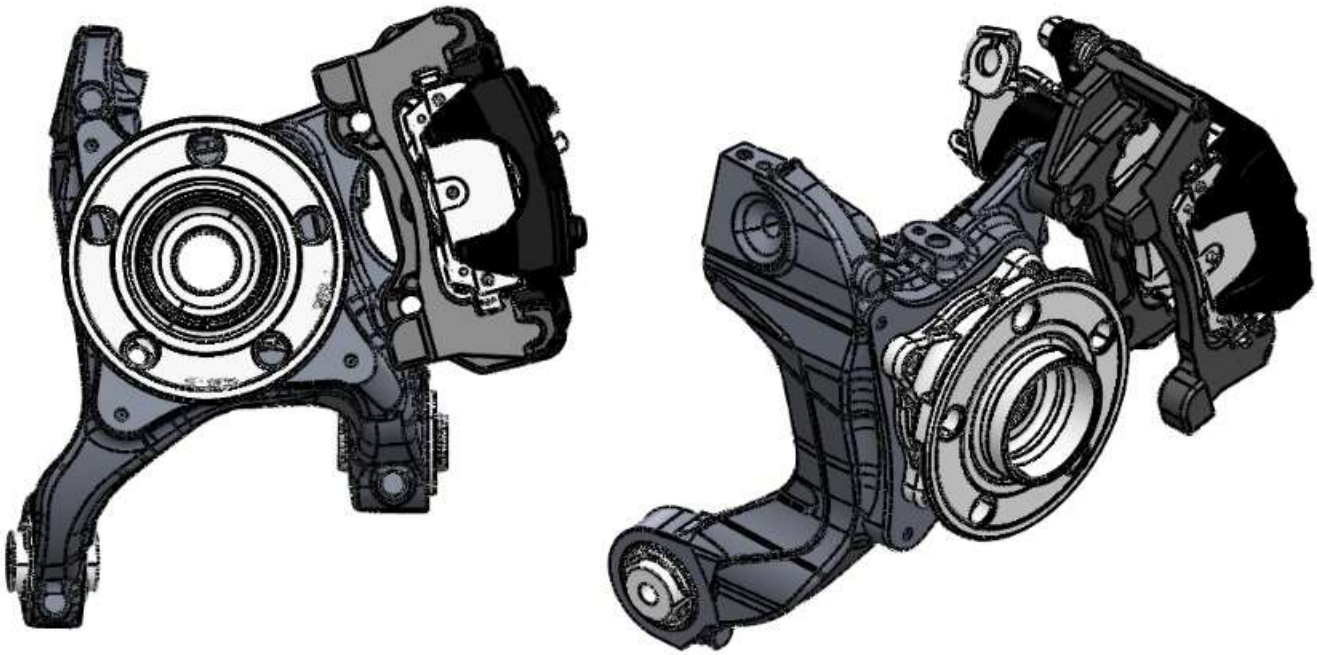

LEFT SIDE SPINDLE

Slide the spindle onto the outer CV joint and start the nut on the end.

Spindle to Lower arm

Connect the bottom of the spindle to the lower control arm using the M16 x 90mm bolts and locknuts. Right side shown.

Wait to torque the axle nut until after the other arms, brakes and e-brake cables are installed.

Spindle to Upper arm

Insert the angled mount adapter into the upper arm rod end.

Reuse the $^{5}/_{8}$" washer that was on the old bolt and place it on the new $^{5}/_{8}$" x 4.25" bolt along with a misalignment spacer.

Attach the upper control arm to the spindle using the bolt with the misalignment spacer.

Use a $^{15}/_{16}$" wrench, $^{15}/_{16}$" socket and ratchet to tighten the locknut.

Wait to torque the bolts until after the other arms are installed.

Check the angle of the upper control arm rod end, make sure that the rod end is not touching the spindle and that it is aligned with the upper control arm.

Toe Link

Attach the Toe link arm to the spindle using the M14 x 80mm bolt and locknut.

Torque the bolts to **135Nm (100 lb-ft)**.

Repeat for the right-hand side.

Coil-Over Shock Assembly

- Snap ring pliers, ¾” wrench, ¾” socket, Ratchet, floor jack, chassis or lithium grease.
- Shock set, Insulated clip hardware.
- The shocks are pre-valved at the factory in compression and rebound for good street use. The shocks can be adjusted in rebound as per Koni’s instructions if so desired.
- Check the rebound setting on each shock. Although they usually come out of the box with rebound on the lowest setting (which is preferred with the standard spring rates) it is not unusual to find them set otherwise.
- The Roadster/Coupe IRS springs are 400lb. Other springs are available for different ride characteristics.
- WARNING! Incorrect assembly and maintenance of this part can cause serious injury or death.
- If using the silver double adjustable shocks, these must be mounted with the body of the shock down.

Unpack the shocks, coil-overs, and hardware.

Double check the jam nut under the rod end and bump stop to make sure that it is tight.
Screw the spring seat down on the sleeve so it is closer to the unthreaded end.

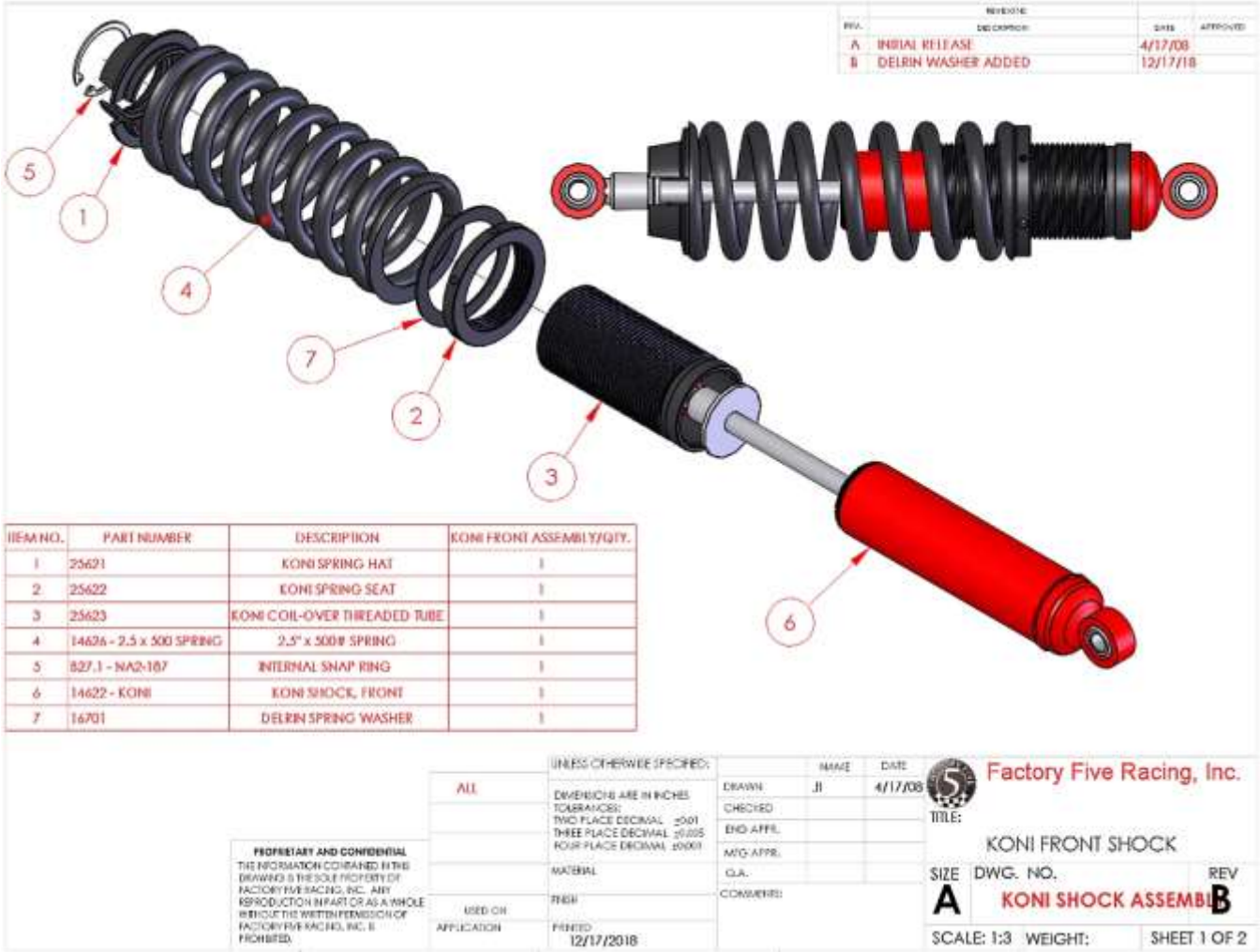

Slide the coil sleeve over the body of the damper beginning at the end which has the rubber bump stop. The unthreaded end of the sleeve goes first so that it will sit on the snap ring on the shock body.

Place a small amount of white lithium or chassis grease on one side of the Delrin washer.

Put the Delrin spacer grease side down onto the spring seat on the threaded tube (shown without tube)

The coil-over hats have a snap ring which holds it in place. Remove this snap ring to assemble the coil over shock.

Slide the rubber bumper about two inches down on the shaft.

Put the spring and hat on the shock and rotate the spring seat back up the sleeve so that the spring pushes the hat tight against the end of the shock.

Install the snap ring on the spring hat so that it holds onto the shock end. Make sure that the slot in the snap ring and the slot in the spring hat are not aligned.

- If using the silver double adjustable shocks, these must be mounted with the body of the shock down in the top-hole location.
- For the stock red Koni or nickel-plated shocks, use the **lower** hole.

Attach the rod end of the shock to the lower shock mount holes using the two equal length 1.09” kit spacers and ½” x 4” bolts and locknuts.

Torque the upper shock bolt to **54Nm (40 lb-ft)**.

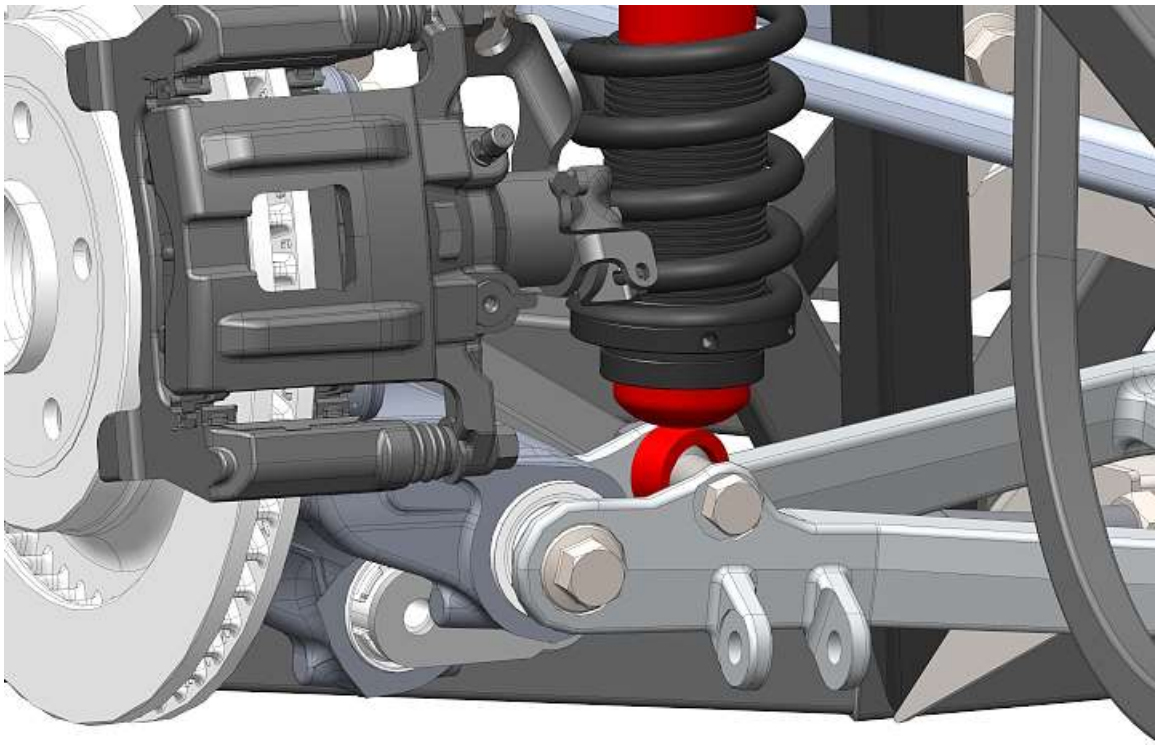

Jack the spindle up so the body end of the shocks can be mounted on the shock mount on the control arm using the longer 1.09” spacer on the back and $^{7}/_{16}$” spacer in front of the shock along with the ½” x 3.25” bolts and locknuts.

Torque the lower shock bolt to **54Nm (40 lb-ft)**.
Remove the floor jack.

Optional IRS Brakes

Download the 2015 IRS brake instructions from www.factoryfiveparts.com/instructions and install the brakes.
Connect the brake hose to the brake caliper.
Torque the banjo bolt to **39 Nm (29 lb-ft)**.
Run the brake hose over to the frame while the suspension is in droop and keep the brake line slack to locate the frame mount.

✋ The e-brake cables are mounted later with the e-brake handle.

IRS CV axle Nut

🛠 Impact wrench, 36mm deep socket, Torque wrench.
✋ Wait to torque the axle nut until after the e-brake cables are installed.

IRS Swaybar (Optional)

🛠 Drill, $^{3}/_{16}$”, ⅜”, ½” drill bits, $^{5}/_{16}$” hex key, $^{9}/_{16}$”, ¾”, ⅞”, $^{15}/_{16}$” wrenches, ¾” socket, ratchet, jack, jack stands, hack saw, ruler, marker

- The rear swaybar is only for use on the Factory Five Roadster when used with the Front swaybar.
- The rod ends and Female rod ends have been shortened at the factory for most applications but may require cutting more if wheel clearance or a high ride height is used.

ITEM NO.	PART NUMBER	DESCRIPTION	Default/ QTY.
1	15407	FRONT SWAY BAR	1
2	15997	16000 - LEFT SIDE SWAYBAR MOUNT	1
3	Swaybar bushing	7/8" SWAYBAR BUSHING	2
4	Swaybar bushing mount		2
5	MALE ROD END	7/16" BORE x 1/2" THREAD ROD END	2
6	15398 1-2 FEMALE ROD END	1/2" FEMALE ROD END	2
7	HJNUT 0.5000-20-D-N		2
8	HBOLT 0.5000-20x2.5x1.25-N		2
9	10834	NYLON INSERT LOCKNUT, 1/2-13 UNC	2
10	HBOLT 0.4375-14x1.75x1.125-N		2
11	NLN-4375C	NYLON INSERT LOCKNUT, 7/16-14 UNC	2
12	13210		4
13	15665	0.50" SPACER	2
14	HX-SHCS 0.375-16x1.25x1.25-N		4
15	13964	NYLON INSERT LOCKNUT, 3/8-16 UNC	4
16	Regular FW 0.375		4
17	HHBOLT 0.6250-11x2.5x1.25-N		2
18	15997	16001 - RIGHT SIDE SWAYBAR MOUNT	1

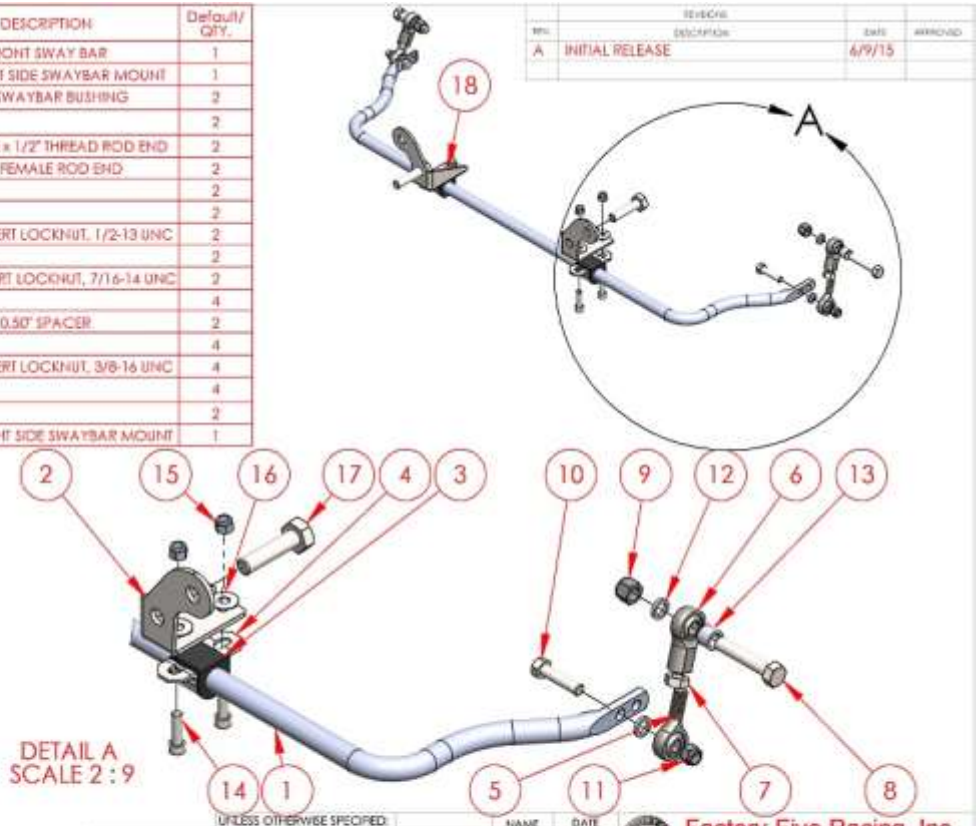

REV	DESCRIPTION	DATE	APPROVED
A	INITIAL RELEASE	6/9/15	

UNLESS OTHERWISE SPECIFIED:
DIMENSIONS ARE IN INCHES
TOLERANCES:
TWO PLACE DECIMAL ±0.01
THREE PLACE DECIMAL ±0.005
FOUR PLACE DECIMAL ±0.001

	NAME	DATE
DRAWN	JI	6/9/15
COMMENTS:		

ROADSTER
COUPE
USED ON
APPLICATION
MATERIAL
FINISH
PRINTED 8/19/2015

Factory Five Racing, Inc.
TITLE: 2015 IRS SWAYBAR COMPONENTS

SIZE A | DWG. NO. 15998 | REV A
SCALE: 1:9 | WEIGHT: | SHEET 1 OF 1

PROPRIETARY AND CONFIDENTIAL
THE INFORMATION CONTAINED IN THIS DRAWING IS THE SOLE PROPERTY OF FACTORY FIVE RACING, INC. ANY REPRODUCTION IN PART OR AS A WHOLE WITHOUT THE WRITTEN PERMISSION OF FACTORY FIVE RACING, INC. IS PROHIBITED.

Parts prep

Paint or coat the swaybar mount plates.

If necessary, the minimum length the rod ends and female rod ends can end up are so the threads are ½" long.

Installation

Raise the rear of the car and put on jack stands.
Undo and remove the IRS lower control arm front bolt and the Toe link bolt.

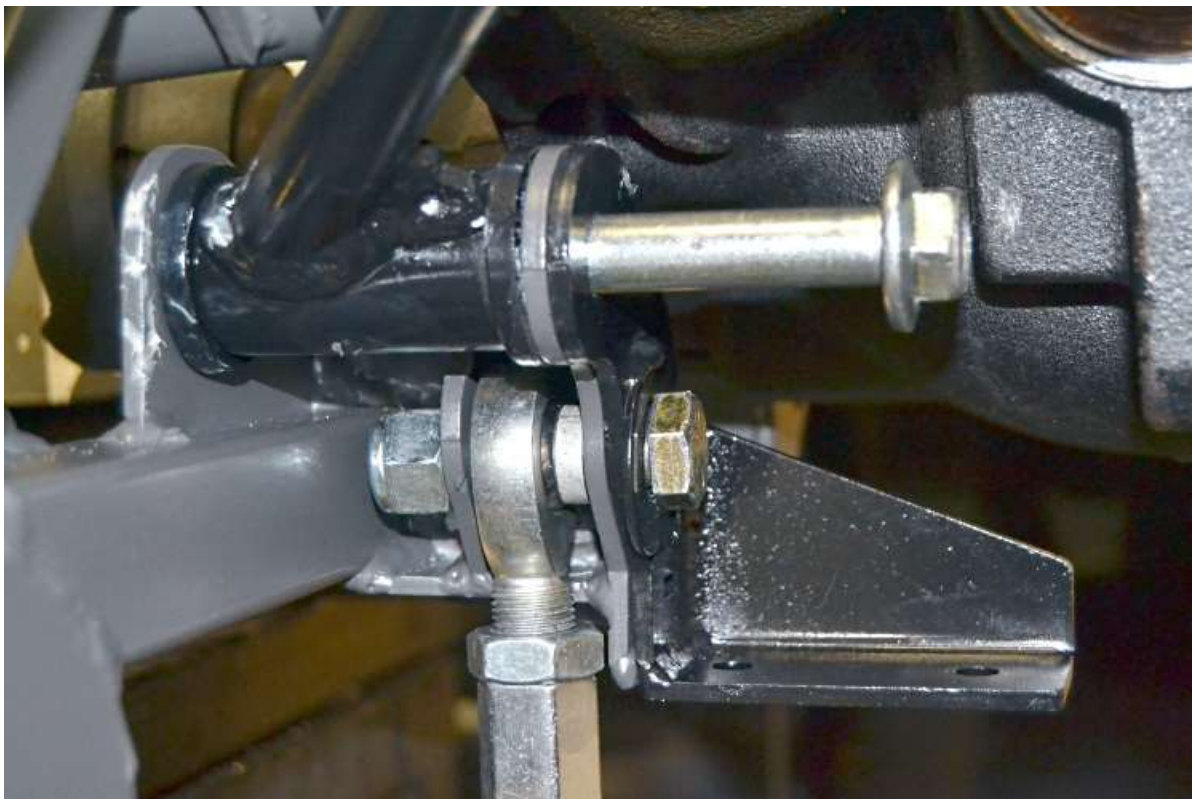

Insert the control arm bolt through the swaybar mount and control arm. Use the new included $^{5}/_{8}$”x 2.50” bolt for the Toe link.

Hold the control arm and Toe link horizontal and torque the bolts to **135Nm (100 ft-lb)**.
Grease the bushing inside using the supplied grease.

Push the bushings onto the swaybar.

Attach the swaybar bracket to the mount plate holes using a $^{5}/_{16}$" hex key and $^{9}/_{16}$" wrench.

Torque the mount bolts to **40Nm (30 ft-lb)**.

Screw the male and female rod ends all the way onto each other.

- The female rod end has a ½" hole while the male rod end has a $^{7}/_{16}$" hole.
- Unscrew the rod end a thread or two if necessary to easily pass the bolt through the rod end and not preload the suspension.

Attach the female rod end to the control arm using the ½" bolts and spacers provided and the male rod end to the swaybar using the $^{7}/_{16}$" bolts provided.

Torque the lower bolts to **54Nm (40 ft-lb)**.
Repeat the process for the other side.
Lower the car off jack stands.

The sway bar should be horizontal or angled down slightly from the bushing to the end. If it is angled down more than 20°, shorten more of the rod ends.

Fluids

Name	Specification
Motorcraft® Additive Friction Modifier (U.S.) XL-3 (U.S.)	EST-M2C118-A
Motorcraft® SAE 75W-85 Synthetic Hypoid Gear Lubricant XY-75W85-QL	WSS-M2C942-A

Fill the rear axle with fluids.

Capacities

Fluid	Amount
SAE 75W-85 Synthetic Hypoid Gear Lubricant	3.15-3.30 pt (1.49-1.56 L)
Friction Modifier	3.0-3.5 oz (0.089-0.104 L)

Alignment specs

Camber: -0.5° to -0.75°
Total Toe: $^{1}/_{8}$" Toe in or 0.28° in

- For every full clockwise (screwed in) of the Toe Link, Camber increases by 0.7° (gains positive Camber) and Toe goes in by 0.156".
- For every full clockwise (screwed in) of the Upper Control Arm, Camber decreases by 0.9° (gains negative camber) and Toe goes in by 0.14".

- To increase negative Camber while maintaining Toe, for every 1 clockwise turn of the upper control arm, the Toe link should be turned counterclockwise 1 full turn. Each full turn of the upper control arm equals -1.6°.
- To change Toe while maintaining Camber, for every 1 full turn of the Toe Link, the Upper control arm should be turned in the same direction ¾ turn. Clockwise will Toe in and counterclockwise will Toe out.

Torque Specifications

	lb.-ft	Nm	
CENTER SECTION TO FRAME FRONT	100	135	
CENTER SECTION TO FRAME REAR	100	135	
BRAKE CALIPER TO CALIPER BRACKET	24	32	
BRAKE CALIPER BRACKET TO SPINDLE	129	175	
BRAKE HOSE BANJO BOLT TO CALIPER	29	39	
LOWER CONTROL ARM TO FRAME	100	135	
LOWER CONTROL ARM TO SPINDLE	100	135	
TOE LINK TO FRAME	100	135	
TOE LINK TO SPINDLE	100	135	
UPPER CONTROL ARM TO FRAME	100	135	
UPPER CONTROL ARM TO SPINDLE	100	135	
HUB TO SPINDLE	98	133	
CV AXLE NUT	98	133	THEN ROTATE 45°
DRIVESHAFT ADAPTER TO PINION FLANGE	41	55	
DRIVESHAFT TO DRIVESHAFT ADAPTER	70	95	

Once the car has been aligned, use a $1^5/_8$" wrench to loosen the upper control arm large jam nut and put some Loctite on the threads where the jam nut will sit.

Retighten the jam nut.

Emergency Brake

E-brake Handle

🛠 $^5/_{32}$", $^3/_{16}$" hex keys, $^7/_{16}$", ½" wrenches, channel lock pliers, WD-40
🚘 E-brake handle assembly (Box 19).

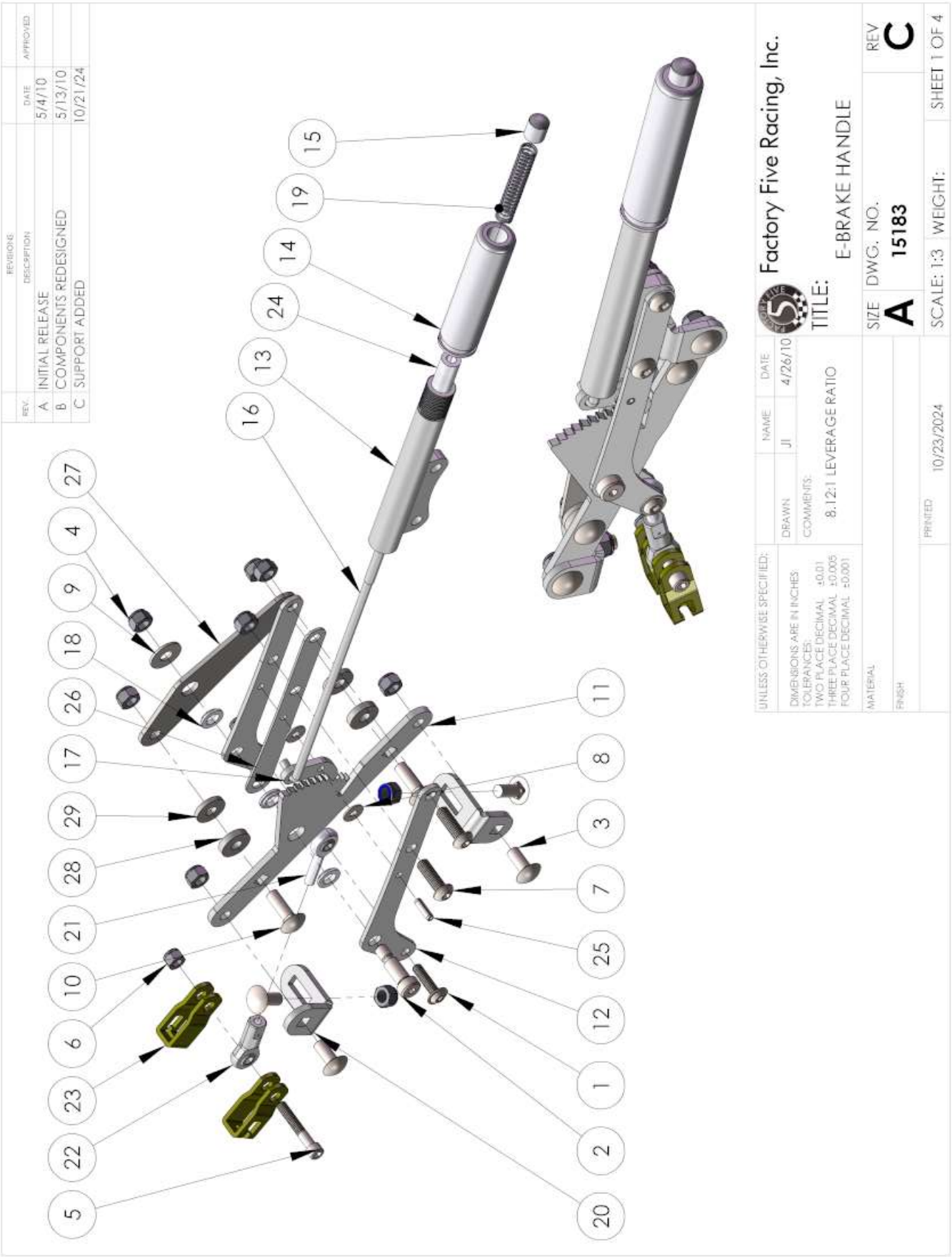

Unpack the emergency brake handle components. Some parts are not used for the Roadster application.

ITEM NO.	PART NO.	DESCRIPTION	QTY.
1	25461	1/4"-20 x 1"	1
2	17737	0.75" LONG SHOULDER BOLT	1
3	25562	5/16"x 3/4" CARRIAGE BOLT	4
4	13963	5/16-18 NYLON INSERT LOCKNUT	9
5	12336	1/4"-20 x 1.5" SOCKET HEAD	1
6	10802	1/4" NYLON INSERT LOCKNUT	2
7	11024	5/16"-18 x 1" BUTTON HEAD	2
8	10635	#10 WASHER	2
9	11005	5/16" WASHER	1
10	15392	5/16"-18 x 1" CARRIAGE BOLT	2
11	15167	FIXED GEAR	1
12	15168	HANDLE TO RATCHET MOUNT	2
13	15176	LOWER HANDLE ASSEMBLY	1
14	15173	HANDLE GRIP	1
15	15174	E-BRAKE BUTTON	1
16	15166	ANCHOR BOLT, 1/4-20 x 10"	1
17	15169	RATCHET TOOTH	1
18	15165	NYLON BUSHING	3
19	15179	COMPRESSION SPRING	1
20	15170	MOUNT BRACKET	2
21	15177	1/4" MALE ROD END	1
22	15180	1/4" FEMALE ROD END	1
23	15181	E-BRAKE CABLE CLEVIS	2
24	15182	0.50" OD x 0.25"ID x 1" NYLON SPACER	1
25	15178	3/16" x 0.625" SPRING PIN	1
26	15168	HANDLE TO RATCHET MOUNT	1
27	17736	HANDLE SUPPORT	1
28	17734	3/16" THK SPACER	2
29	17735	1/8" THK SPACER	2

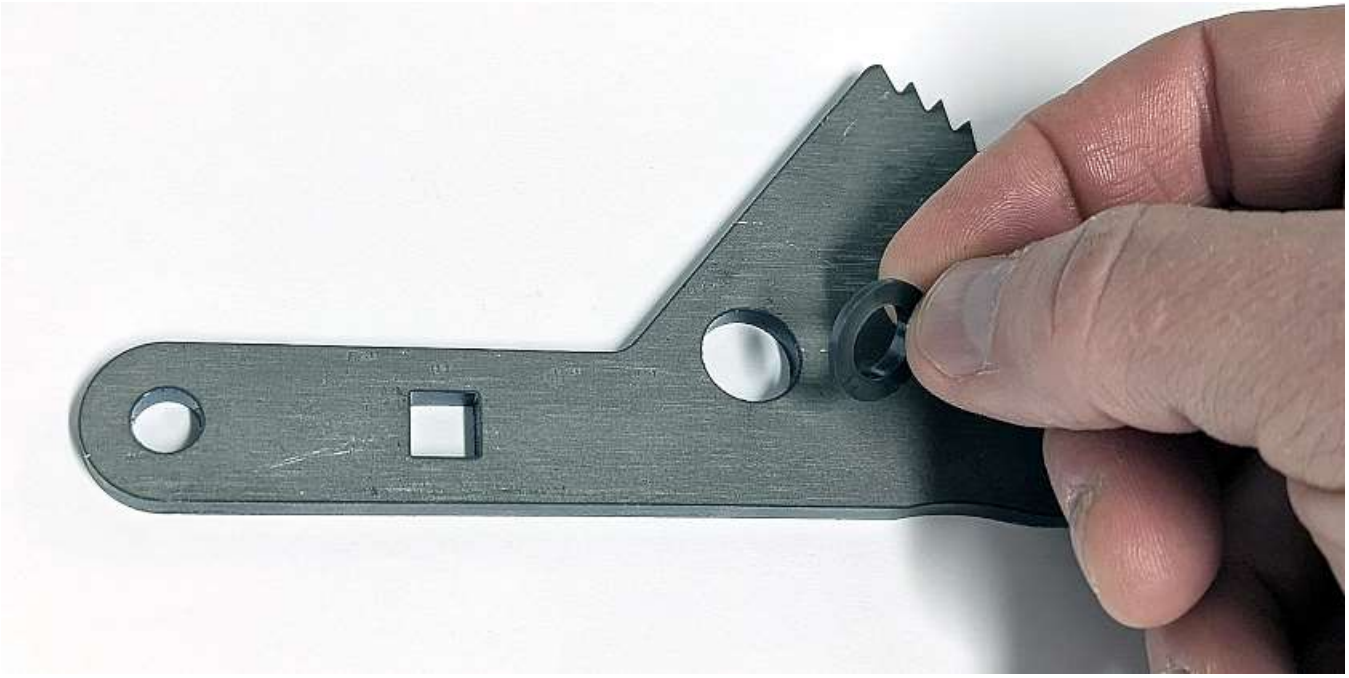

Push a nylon bushing into one side of the fixed gear.

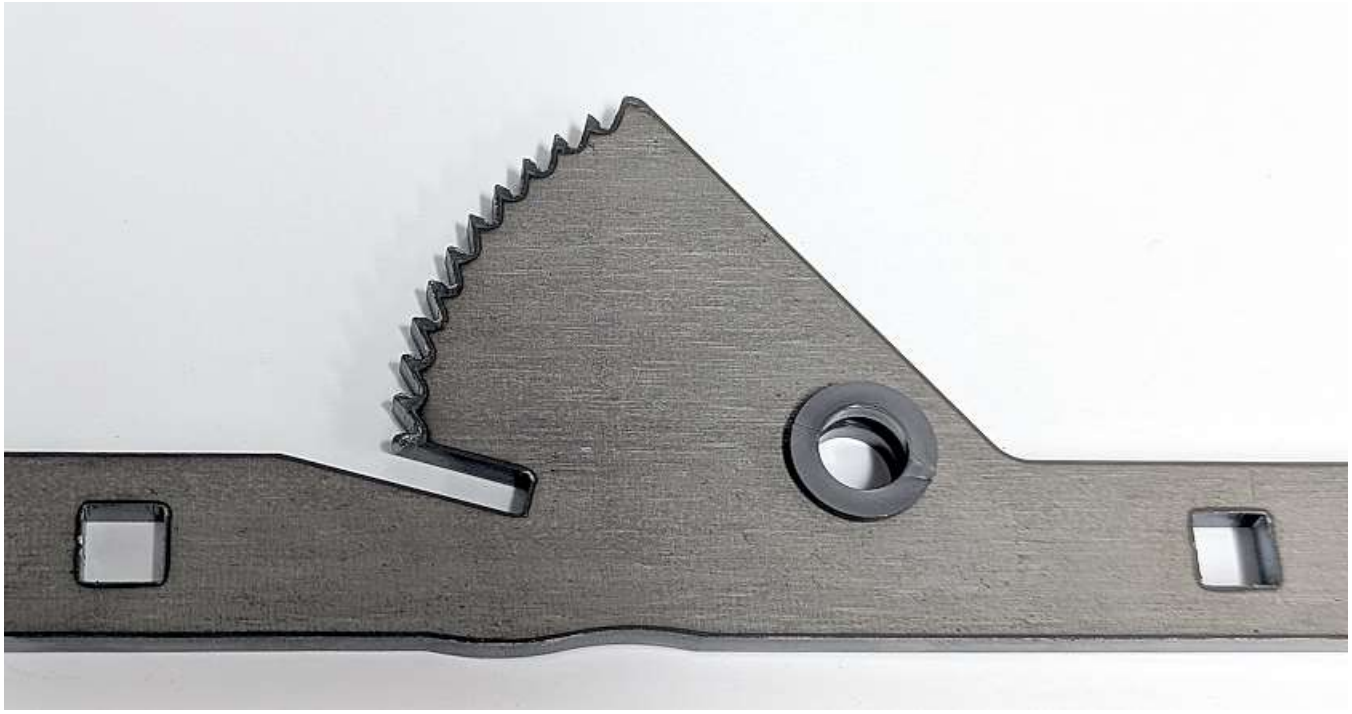

Push the other bushing into the other side of the fixed gear.

Place a bushing in the left side of the handle support.

Insert the shoulder bolt through a handle mount and put it on table.

Put the fixed gear on the shoulder bolt.

Place the handle to ratchet support on the shoulder bolt making sure to orient the part so the small hole lines up with the hole in the handle mount.

Place the other handle mount on the shoulder bolt.

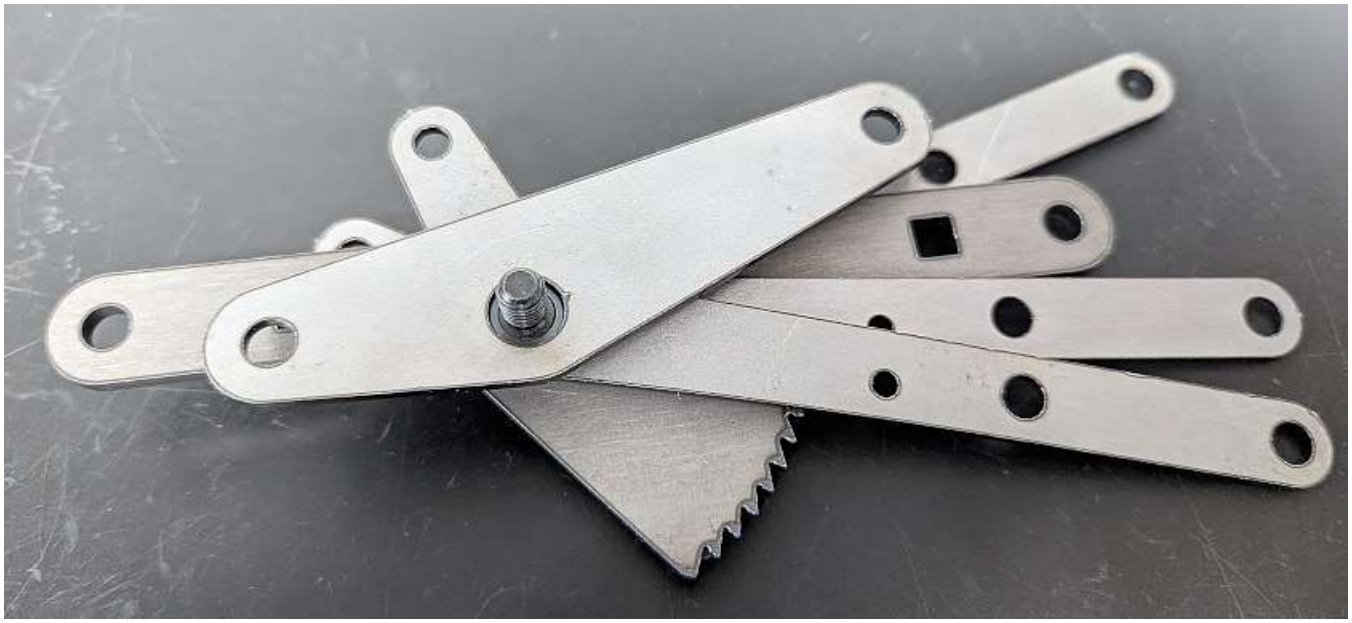

Put the handle support on the shoulder bolt bushing side down.

Place the $^{5}/_{16}$" washer and locknut on the shoulder bolt.

Using a $^{3}/_{16}$" hex key and ½" wrench, tighten the shoulder bolt lock nut so that the ratchet to handle mount plates are against the bushings but they can still move up and down.

Slide the lower handle between the ratchet to handle mount plate and the handle to ratchet support. Bolt the pieces together using the two $^{5}/_{16}$"x 1" button head screws as shown above.

Put the ratchet tooth on the long anchor bolt as shown in the picture below.

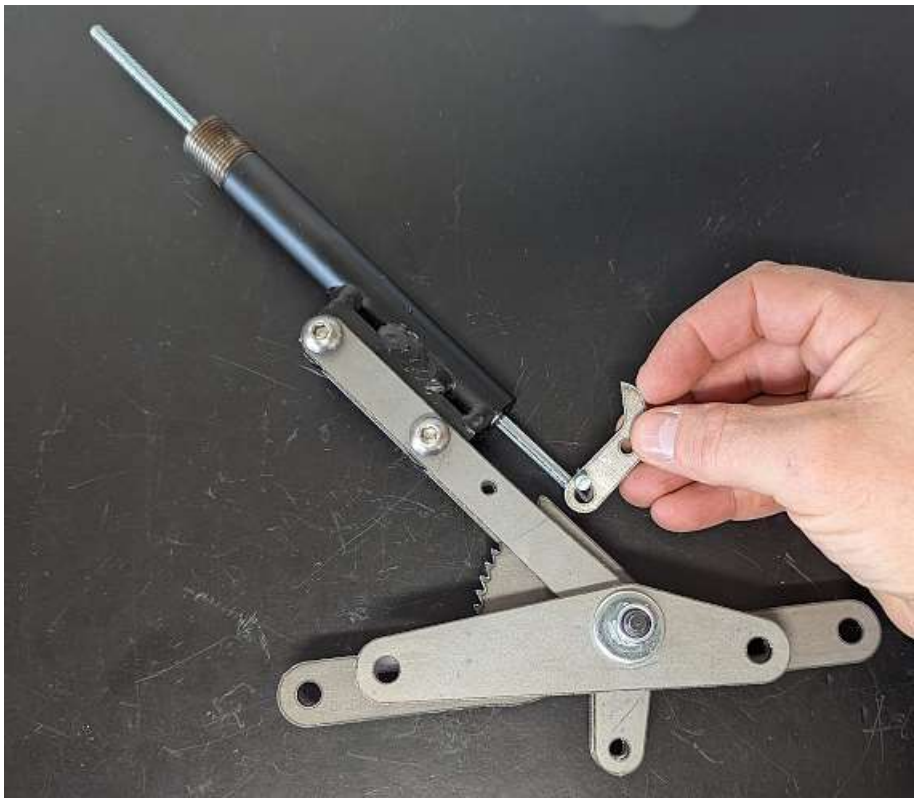

Rotate the fixed gear out of the way and pass the anchor bolt up through the lower handle.

Rotate the ratchet tooth between the handle to ratchet mount plates and align the mount holes.

Push the included spring pin through the ratchet mount plates and the ratchet tooth using a pair of channel lock pliers.

Slide the 1” nylon spacer onto the end of the anchor bolt.

There are two nylon spacers included. They provide preload on the spring so there is more force holding the ratchet tooth to the fixed gear and making the release button harder to push. Try using the 1” long spacer first. After the handle is assembled, try the handle and if desired the other ½” spacer can be added.

Spray a little WD-40 on the lower handle threads and screw the upper handle onto the lower handle.

Insert the spring into the upper handle over the anchor bolt.

Screw the button onto the end of the anchor bolt.

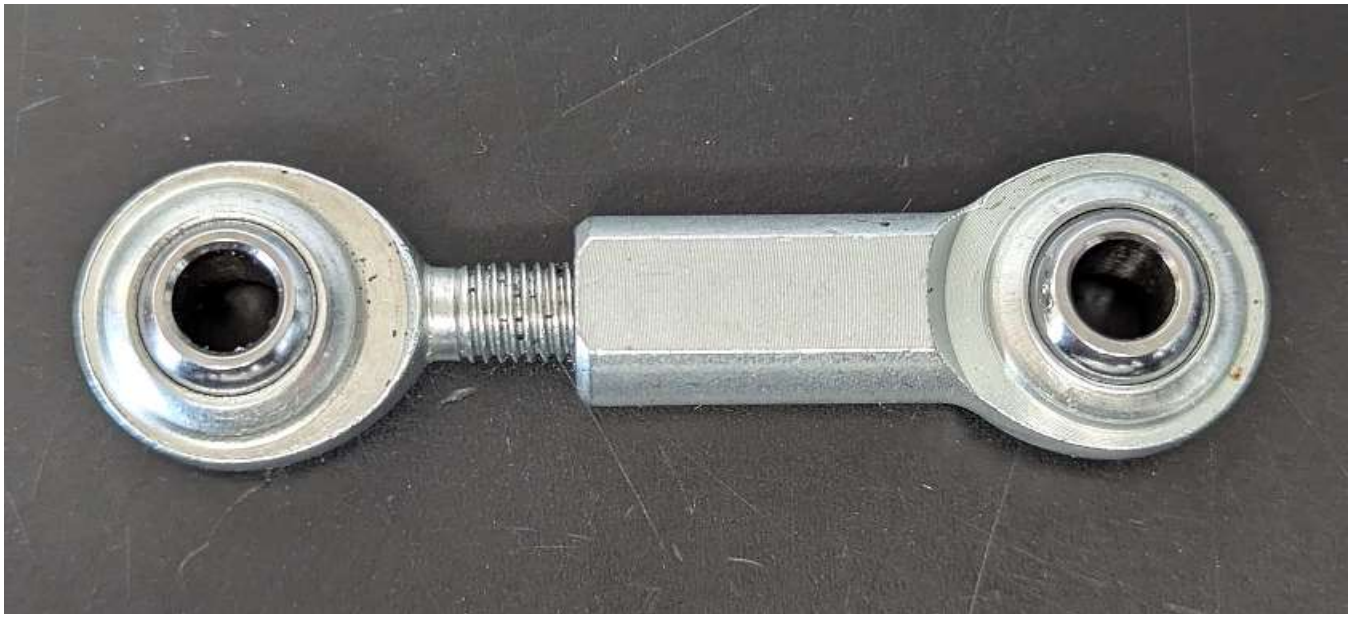

Screw the male and female rod ends together.

Use a wrench to spread the ears of the ratchet to handle mounts so that the rod end can just slide between them.

Slide the male rod end between the ratchet to handle mount plates and attach it using the ¼” flange head bolt and locknut.

Insert a $^{1}/_{8}$" and a $^{3}/_{16}$" spacer in between the fixed gear and the handle support at the ends of the handle support.

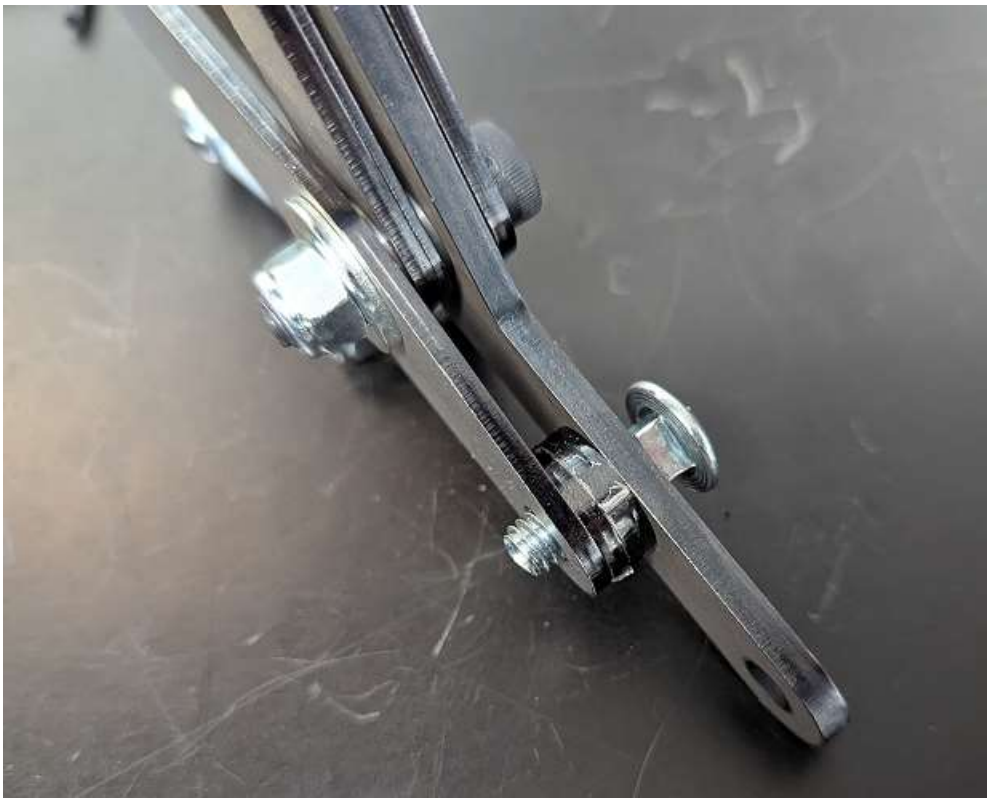

From the right side insert a $^{5}/_{16}$" x 1" carriage bolt into each square hole.

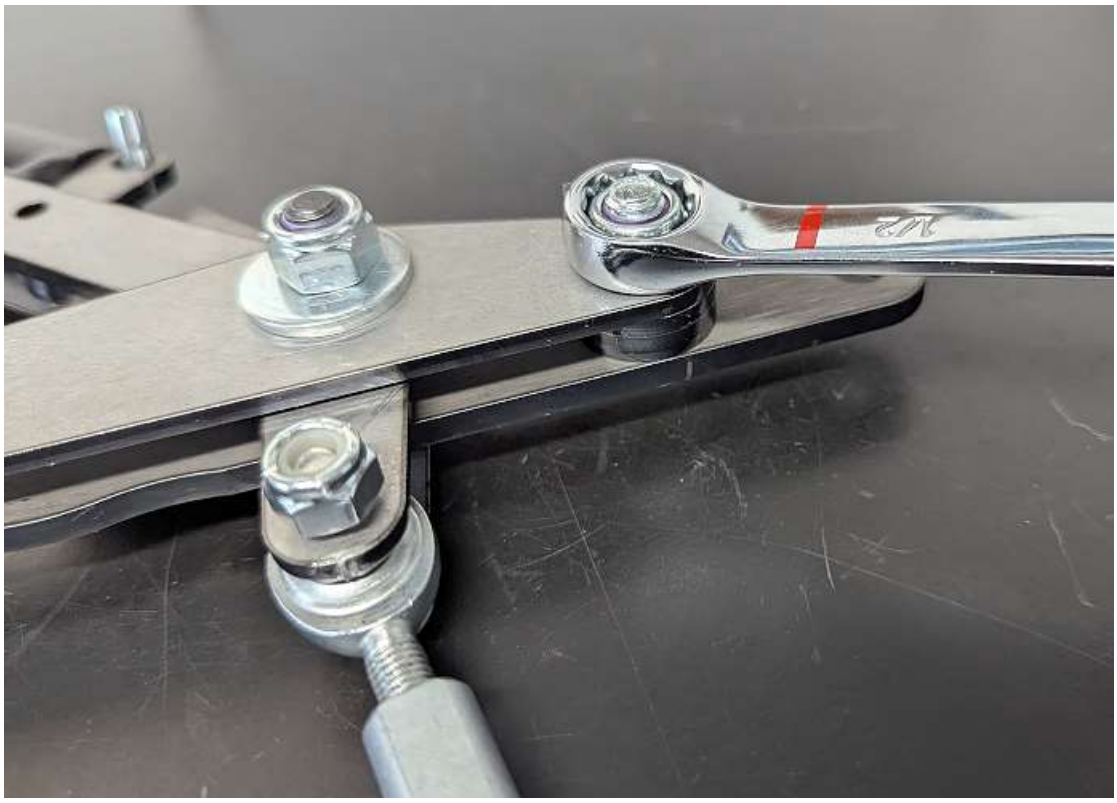

Screw a $^{5}/_{16}$" locknut onto each carriage bolt and tighten with a ½" wrench.

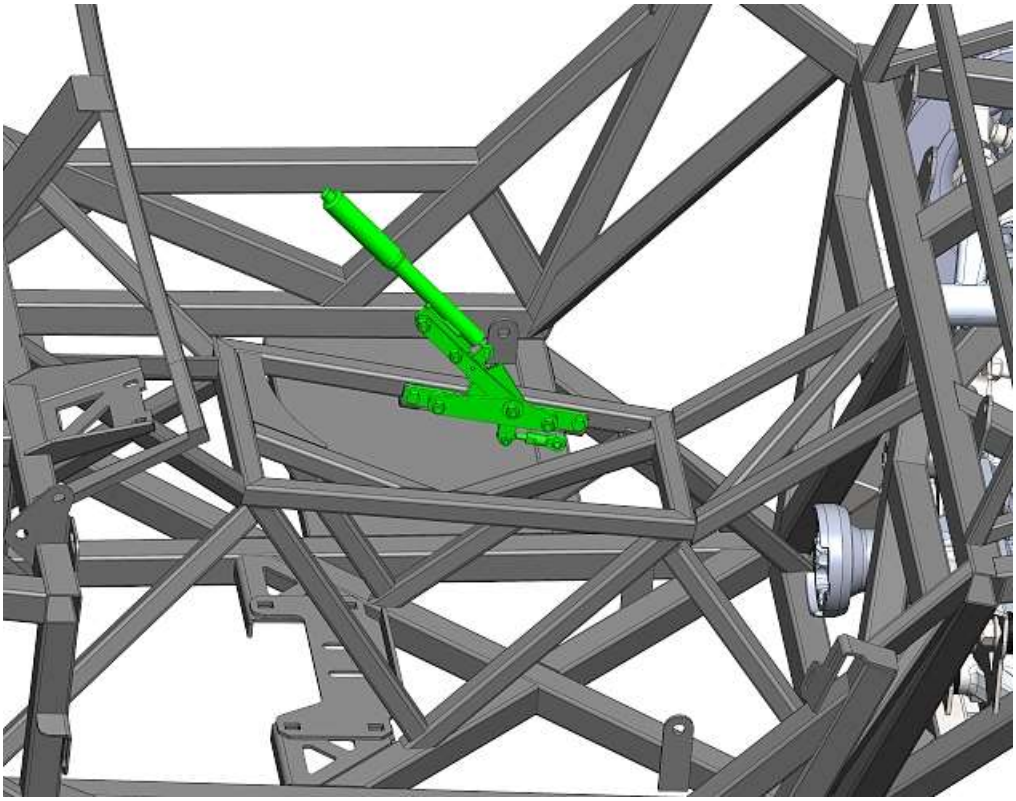

Attach the handle to the frame in the transmission tunnel using the $^{5}/_{16}$”x 0.75” bolts.

E-brake cables

If there is a rubber washer on the end with the clip (frame end) of the cable shown, remove the rubber washer.

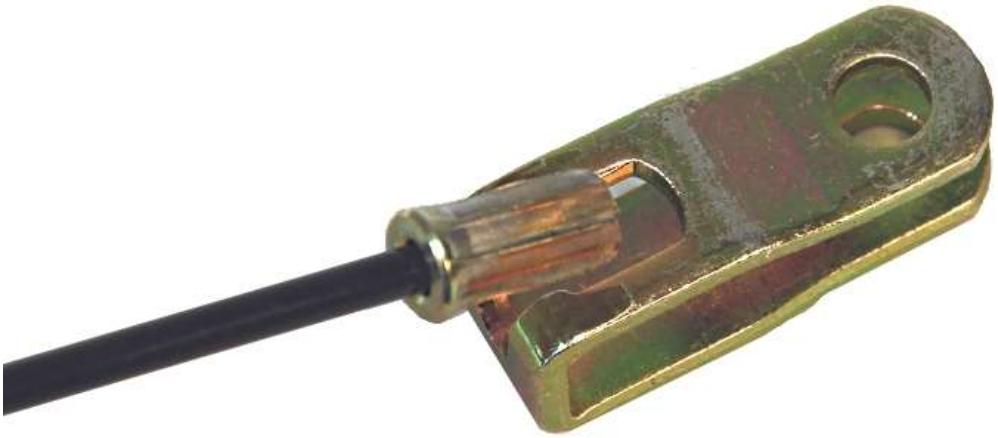

Check the fit of the emergency brake cable end in the brake cable clevis.

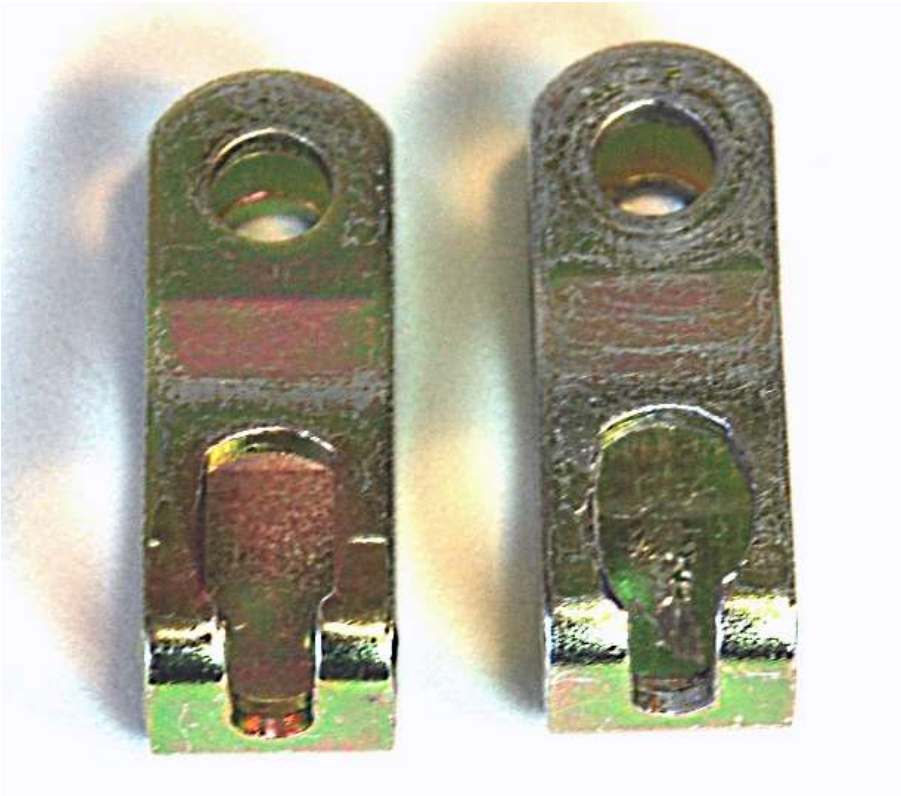

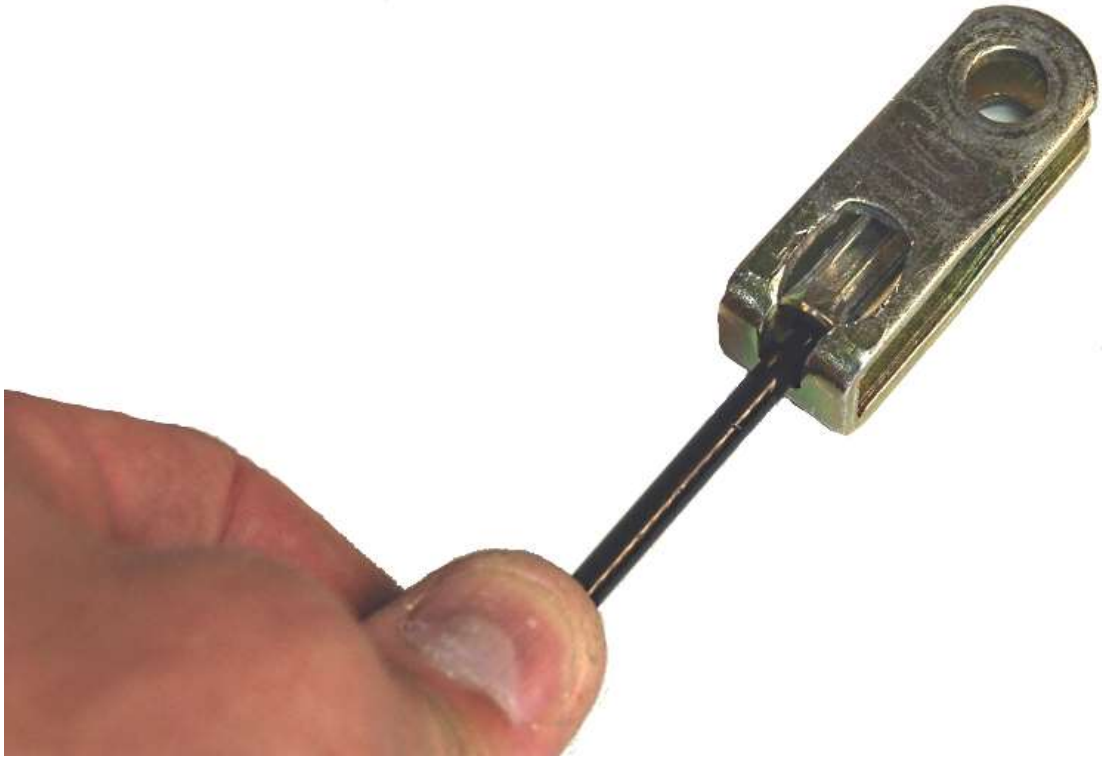

If necessary, use a drill bit and drill or a Dremel tool to open the slot slightly.

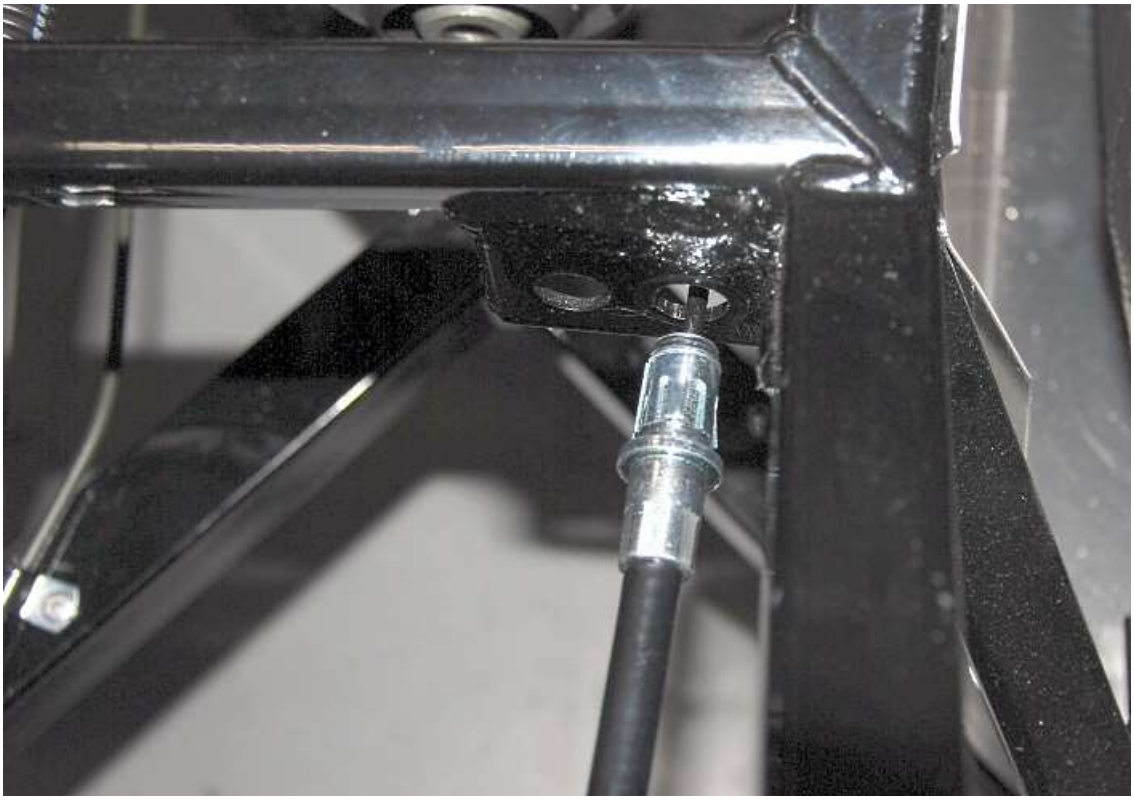

Push one of the cables through the bracket in the transmission tunnel until the sheath end clicks in place.

Push the second cable into the frame bracket.

Solid Axle

Route the cables back to the calipers and attach. Make sure your routing is out of the way of any moving parts and the cable has slack to move with the axle.

On the end of the Emergency brake cable sheath with no clip on, pull/push the cable so that 3” of cable sticks out of the sheath.

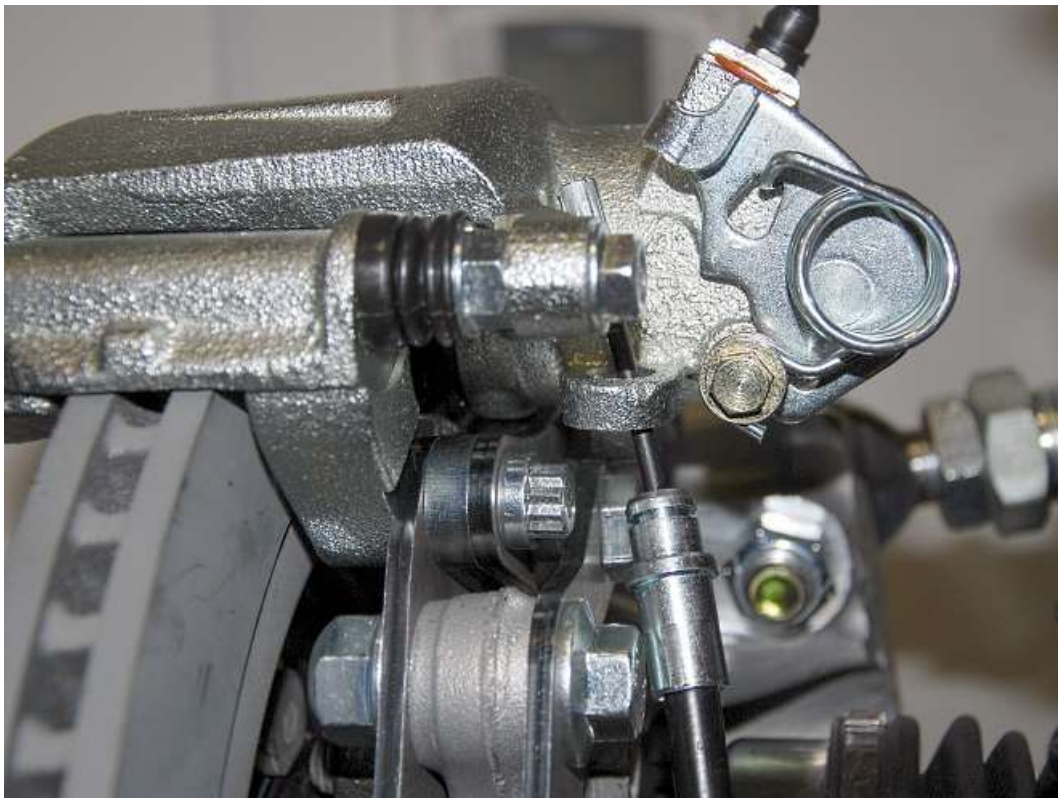

From the bottom, insert the cable through the hole in the brake caliper.

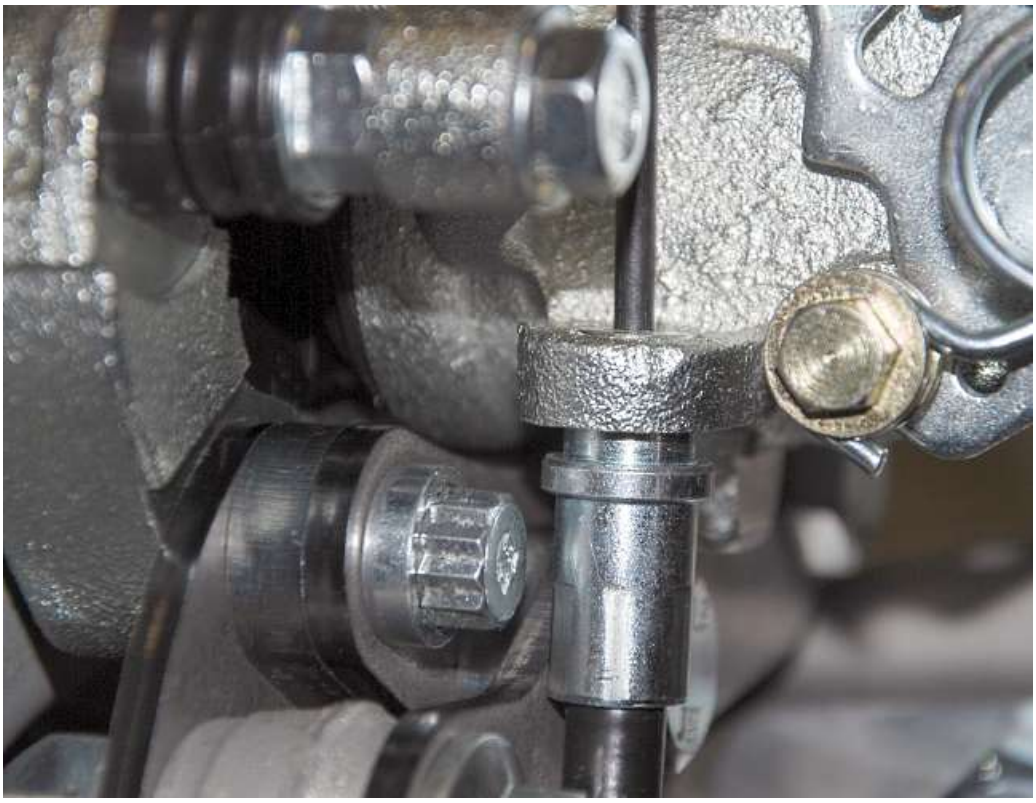

Push the end of the sheath into the hole. The end of the sheath may or may not bottom on the flange. It is normal for the sheath to look like the picture, the end is being held in place and cannot move.

Move the end of the cable around the spring bracket so it will be captured.

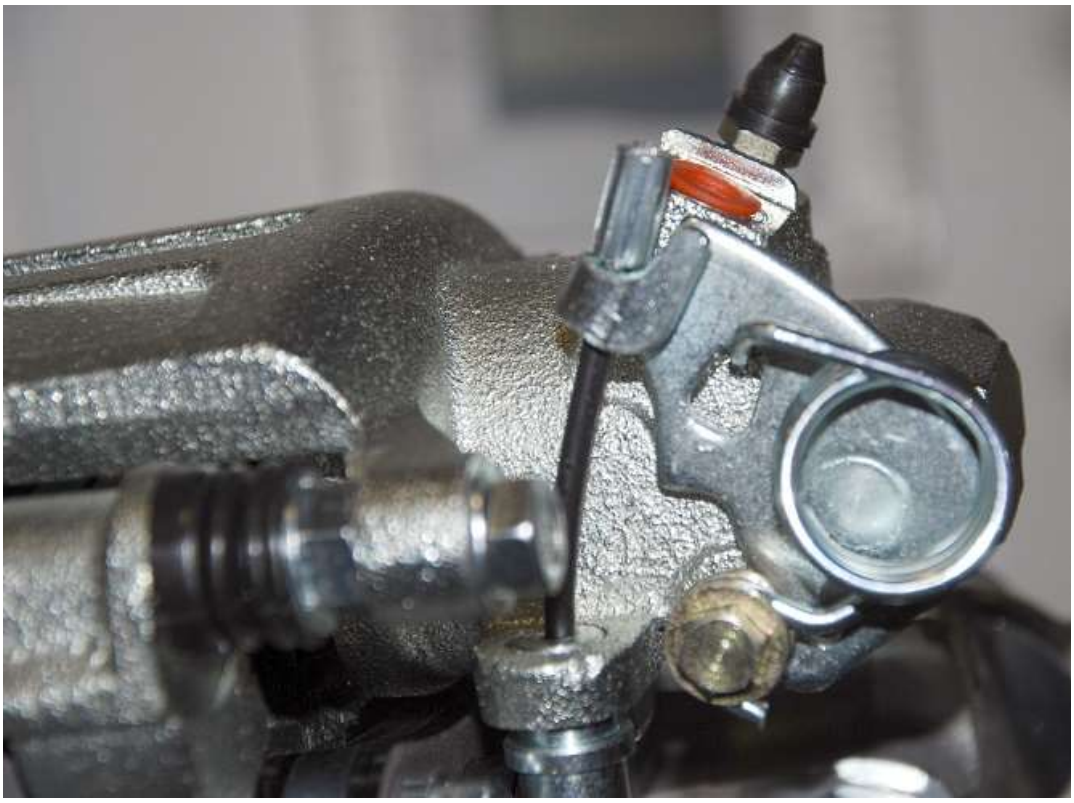

Push the cable so that the end of the cable sits on the spring bracket.

IRS

Route the cable back behind the shock and towards the middle of the car.

Route the cable up over the center section and to the bracket in the transmission tunnel.

Wilwood IRS E-brake adapter

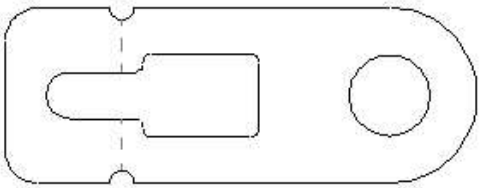

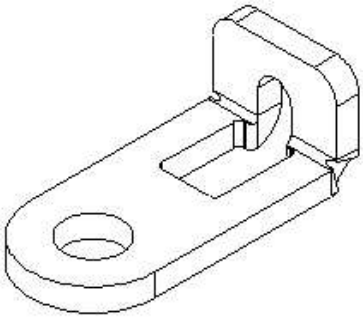

WILWOOD CALIPER E-BRAKE ADAPTER

Insert the cable end into the bent bracket then bolt the bracket to the e-brake lever.

Fuel System

🚘 Insulated clip hardware (Box 4), Fuel line parts (Box 1), ¼”, $^{5}/_{16}$” fuel lines (Box 5), OEM fuel tank components (Box 24).

✋ The pictures show the install of the complete kit fuel system, the OEM set-up is similar.

🛠 $^{9}/_{16}$” and $^{5}/_{16}$” deep sockets, ratchet, $^{7}/_{16}$” wrench, rubber mallet, hammer, marker, punch, or flathead screwdriver, $^{3}/_{16}$”, $^{9}/_{16}$” wrench, floor jack, friend, WD 40 or other light lubricant, drill, ¼” drill bit.

Frame prep

🚘 Secondary body fasteners (Box 4), fuel tank straps (Box 24), (4) $^{3}/_{8}$” x 2.25” bolts and Flanged Nylon locknuts

Unpack the fuel strap fasteners. (4) $^{3}/_{8}$" x 2.25" bolts and Flanged Nylon locknuts.

Unpack the 1" square plastic end caps from the secondary body fasteners.

Push the two plastic end caps into the tubes hanging down in front of the gas tank area.

Put the fuel tank bolts in the gas tank front frame mounts.

Hang the fuel tank straps from the rear mount of the chassis using two of the strap fasteners. The longer strap goes on the right side.

Fuel Tank Vent

🛠 ¼”, $^{5}/_{16}$” sockets, ratchet, (2) $^{7}/_{8}$” wrench, Teflon tape, razor knife
🚘 OEM fuel tank components (Box 24).

Unpack the OEM fuel tank components including the tank and straps.

Screw the vent into the plastic bushing and tighten with a $^{7}/_{8}$" wrench.

Insert the small rubber vent gasket in the small hole on the top of the tank.

Push the vent into the grommet.

Fuel Pick-up

- This install shows the set-up for a pick-up with an inline fuel pump. See www.factoryfiveparts.com/instructions for in-tank fuel pump set-up.
- For fuel injected engines it is better to have an in-tank pump.

✋ In-tank pumps are quieter than in-line pumps.

Prep

✋ If the car will have a high horsepower fuel injected engine there are a few “tweaks” we recommend get done to the fuel pick-up.

🛠 Drill, pliers, $^{1}/_{8}$”, $^{5}/_{32}$”, ¼”, $^{9}/_{32}$” or $^{19}/_{64}$” drill bits

Remove and discard the rubber piece on the end of the return line, this can affect the fuel pressure at the engine.

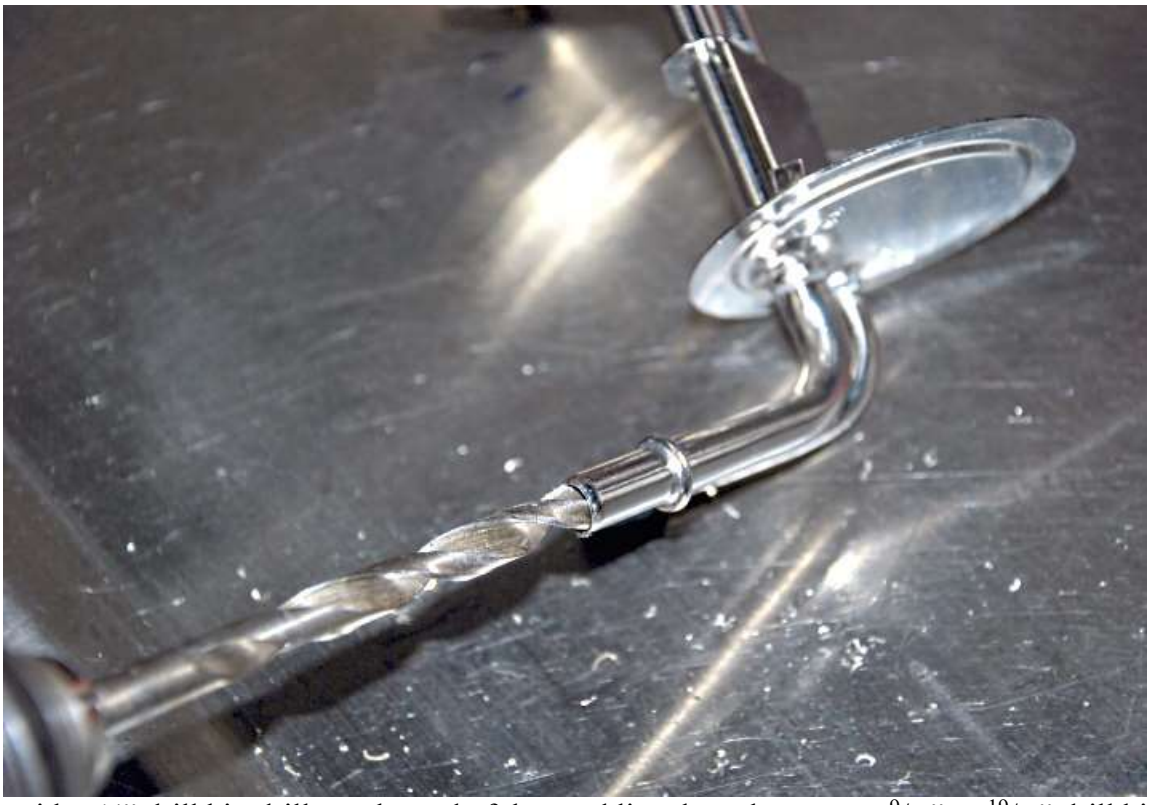

Starting with a ¼” drill bit, drill out the end of the send line then change to a $^{9}/_{32}$” or $^{19}/_{64}$” drill bit, the pressed end is a little restrictive.

Starting with a ¼” drill bit, drill out the end of the return line then change to a $^{9}/_{32}$” or $^{19}/_{64}$” drill bit, the pressed end is a little restrictive.

Install

✋ Use the O-ring with the round profile not the square profile packed in with the pick-up.

Set the rubber O-ring gaskets in place for the fuel pump pickup.

Slide the pickup down into the tank; you will have to rotate as you go to get the tubes into the sump and line up the tabs on the pick-up and slots on the tank. You can see this looking through the filler neck hole.

With the pickup all the way down, slide the mounting collar and tap tightly into place with a punch and hammer.

✋ Make sure that the lock ring is held by all three locking tabs on the tank or the sender will leak.

Fuel Gauge Sender

Set the rubber O-ring in place for the fuel level sending unit.

Insert the fuel level sender into the tank.

Tap the locking ring tightly into place with a punch and hammer.

✋ Make sure that the lock ring is held by all three locking tabs on the tank or the sender will leak.

Fuel filler neck

Insert the large rubber filler neck gasket in the side of the tank.

Slide the filler neck tube into the tank. A little oil or WD40 on the rubber gasket helps.

Slide the retaining bracket down the filler tube and mark its mounting location on the tank if there is not a hole already.

Move the retainer out of the way and make sure your mark is outside the weld that holds the two tank halves together.

Drill a ¼” hole through the tank flange on the mark made.

Use the ¼”x ¾” bolt and locknut to attach the retainer to the tank.

Tank prep

🛠 Adjustable wrench
🚗 Fuel tank
✋ The flange around the tank must get flattened. If it is not flat the tank will not mount correctly.

Use an adjustable wrench to flatten the fuel tank flange at the strap locations on the tank.

Fuel tank install

Put the metal tank in the plastic tank cover.

Use a floor jack to raise the tank with the cover up into place on the chassis.

Bolt the straps in with the strap fasteners and drop the jack.

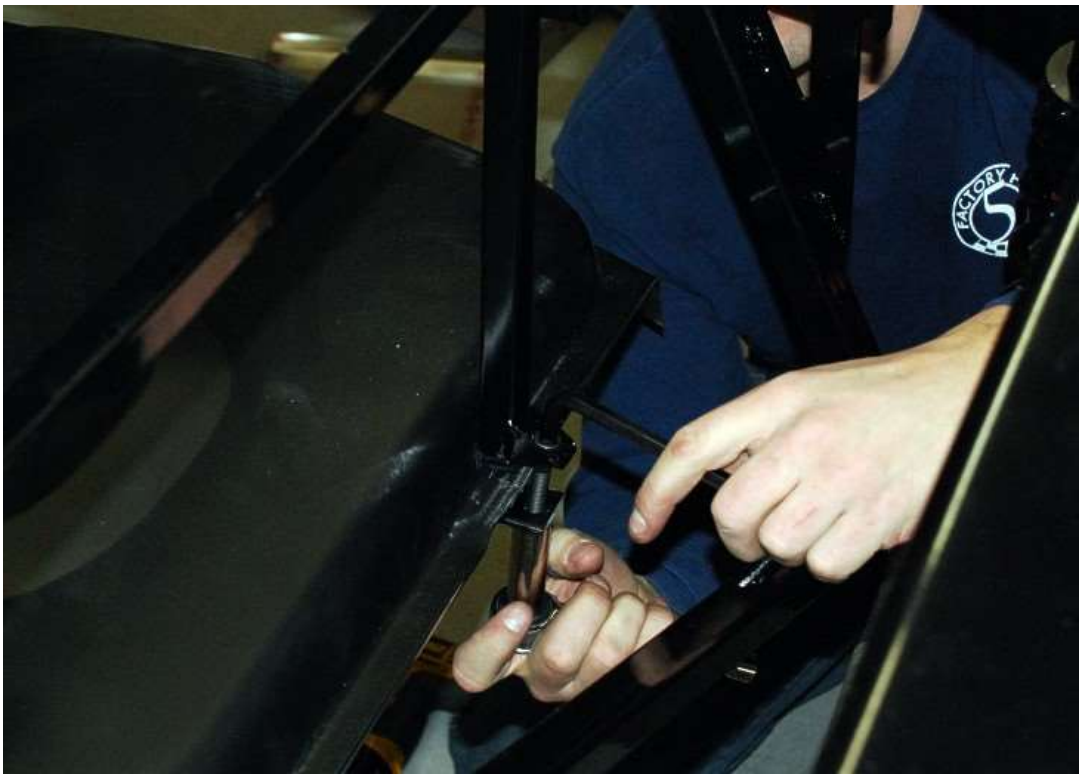

Tighten only the left side strap as the right one will be removed for aluminum fitment later-on.

Fuel filter

🛠 Tube bender, $^{3}/_{16}$" drill bit, drill, rivet tool, marker, tape measure, flat head screwdriver
🚘 OEM fuel tank components (Box 24).

Unpack the fuel filter and mounting hardware.

Open the hose clamp and slide it through the slots in the mount and start to tighten it back up into a hoop just bigger than the filter.

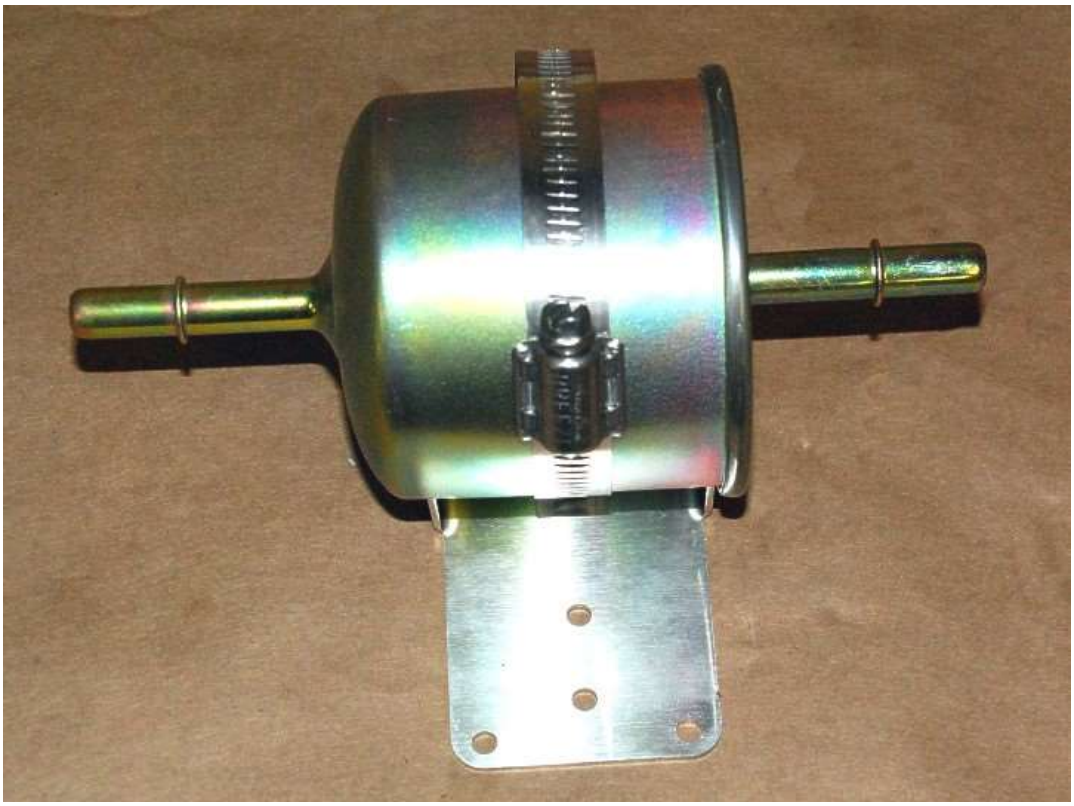

Clamp the filter in place on the mount with the filter flange oriented as shown.

Make sure to attach the fuel line to the correct side of the filter, the arrow indicates the flow of fuel.

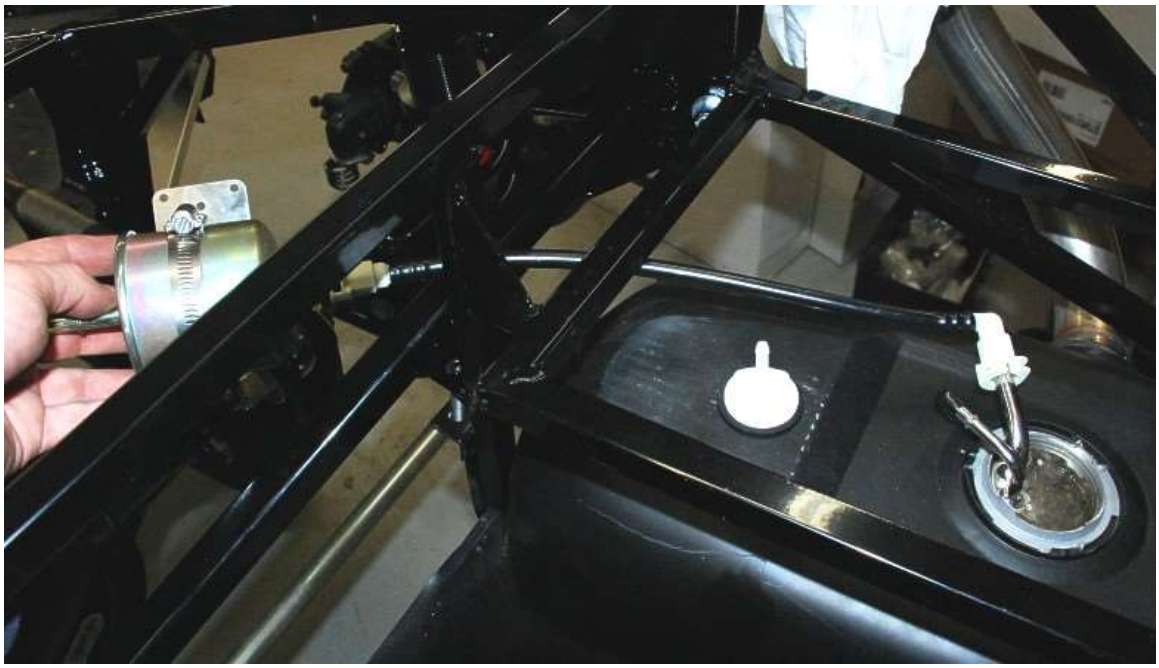

Attach the short nylon fuel line to the filter and the tank to show where your mounting location must be. The elbow end can attach to either end as shown here; we have attached it to the tank.

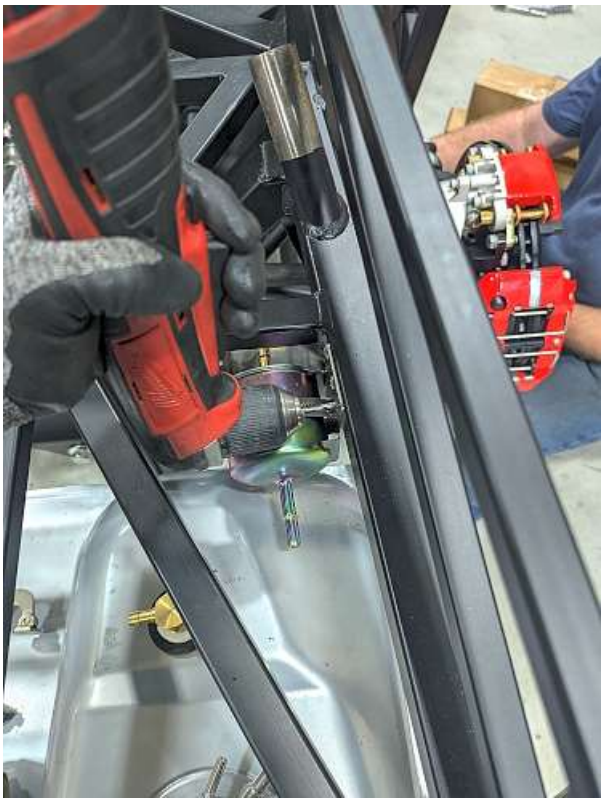

Hold the filter bracket up to a chassis tube and mark the holes, then drill and rivet the bracket on using $^{3}/_{16}$" rivets.

Hard lines

- The fuel line routing will depend on your style of fuel pump, whether it is in-line, in-tank, or mounted on the engine.
- The size of your lines is dependent on the engine horsepower and pump size used.
- The most important things are: To route the lines so that they are protected by the chassis; not close to any heat source or moving parts; provide enough slack in the rubber hoses for the engine to move.
- Which side you run down may depend on where you are hooking up to your fuel rail, carburetor, or pressure regulator. These pictures show a crate engine Coyote which has the fuel rail connection on the left side of the engine.
- **Never** run fuel lines below the bottom of the frame. If the frame contacts the ground for some reason it could damage the lines.
- If using the optional EFI Fuel system which includes -AN lines, in-tank pump mount and pump, follow the instructions for that at https://www.factoryfiveparts.com/instructions/
- Hard fuel lines (Box 5), fuel line parts (Box 1).

Unpack the fuel lines and the fuel line assembly which is in the secondary chassis components box.

The larger $^{5}/_{16}$" line is the send fuel line to the engine. If you are running a return system then there is ¼" line provided for that as well. There are barbed fittings provided for both sizes.

Use the ¼" flexible line, $^{5}/_{16}$" flexible line, and fuel injection hose clamps to connect the nylon fuel line connectors to the hard line.

Connect the $^{5}/_{16}$" hard line to the fuel filter outlet.

From the filter we generally run the lines to the middle of the frame then down the transmission tunnel.

Run the hard line up to the front of the transmission tunnel.

Finish running your fuel system by hooking up either to your carburetor, fuel rail or fuel pressure regulator. Here we mounted a pressure regulator on the firewall and ran a single line over to the rail.

Connect the ¼” return line to the fuel tank.

Vent hose

Attach a 25” section of $^{5}/_{16}$” fuel line and fuel line clamp onto the vent.

Attach the vent hose to a charcoal canister if using the FFR fuel system.

If not using the FFR fuel system run the vent hose over to front fuel tank mount so that it is higher than then tank and zip tie in place; then run it down to the ¾” tube and attach it to the tube using a zip tie.

Pedal Box

- $^{7}/_{16}$”, ½” sockets, ratchet, ¼”, ⅜”, $^{7}/_{16}$”, ½” wrenches, $^{3}/_{16}$”, ¼” drill bits, drill, Philips head screwdriver, $^{3}/_{16}$” Hex Key, snap ring pliers
- Pedal Components (Box 19).
- This pedal box is set-up to use either a hydraulic clutch or a cable clutch. The parts and instructions required for a cable clutch installation are included below.
- There are two ways to connect the clutch pedal to the clutch, cable clutch or hydraulic clutch. A cable clutch is good for small block Ford engines; we have found that with higher horsepower engines which have heavier clutches a hydraulic clutch really lightens the feel of the pedal.
- Unpack the pedal box assembly. Now is a good time to paint all bare steel brackets.
- The pedal box comes with two pedal switches, one for the brake lights and the other can be used as a clutch safety switch (used to prevent starting the car while in gear) if desired.

Pedal pads

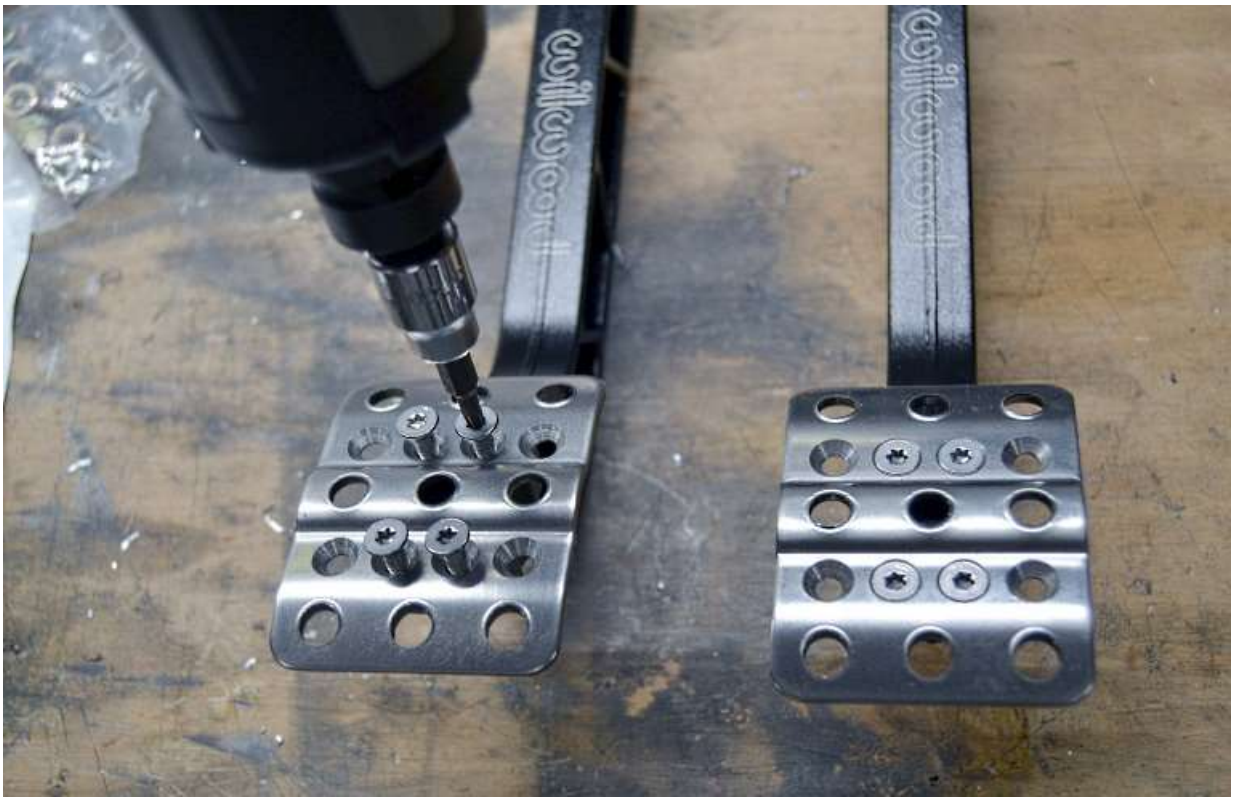

Attach the pedal pads to the pedals using a T-20 Torx bit. The pads mount holes allow the pads to be moved around if desired depending on foot room needed. Start with the pads in the middle holes. Once the seats are mounted in the car the pads can be moved or cut as needed.

Brake switch mount

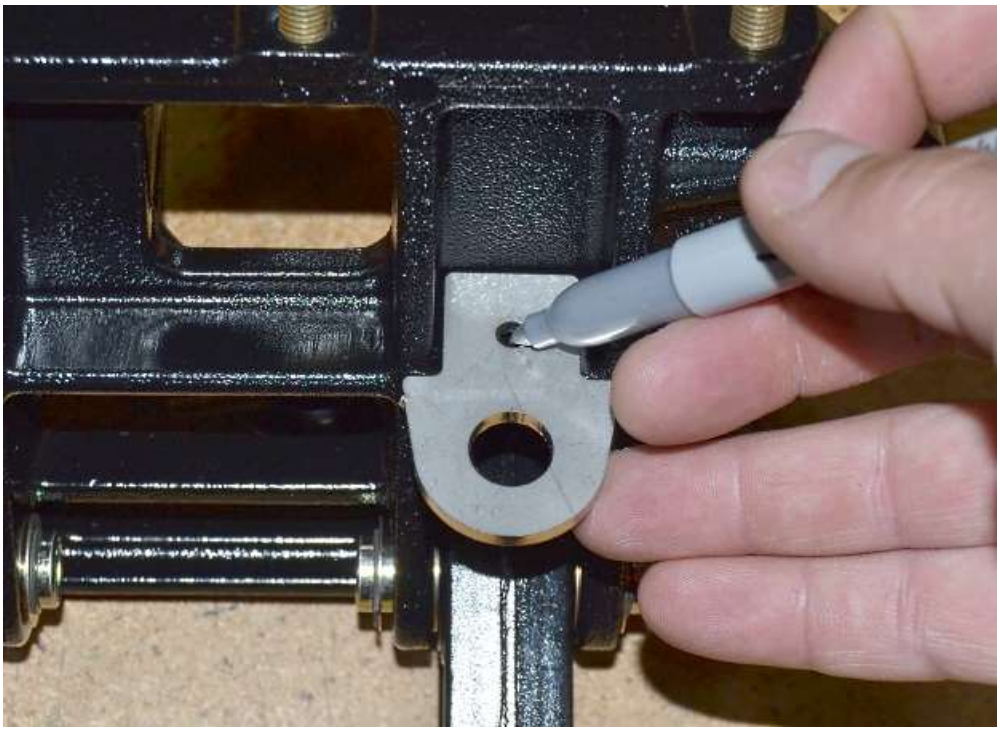

Place the switch mount between the brake pedal mount tabs on the side closest to the brake pedal pivot holes and drill a $^{3}/_{16}$" hole through the brake switch mount hole and the pedal box.

Attach the switch mount to the pedal box using the black #10 screw and locknut.

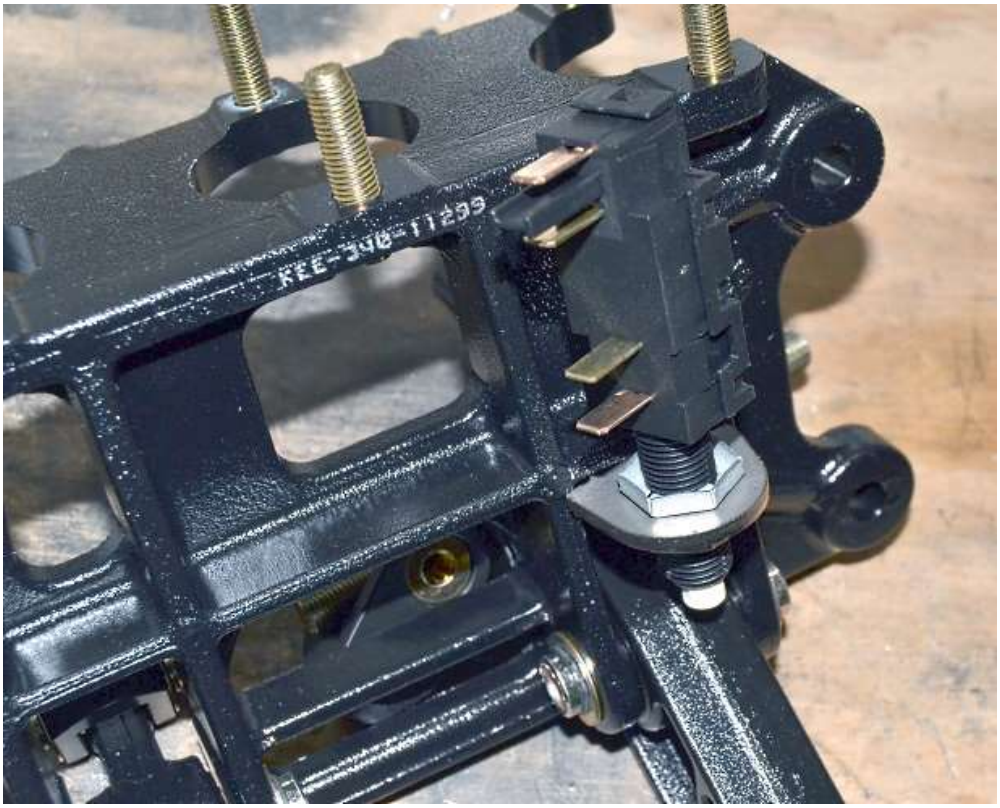

Connect the switch to the switch mount using a hex nut on each side of the mount bracket.

Clutch safety switch mount

✋ The clutch switch mount attaches the same way as the Brake switch mount.

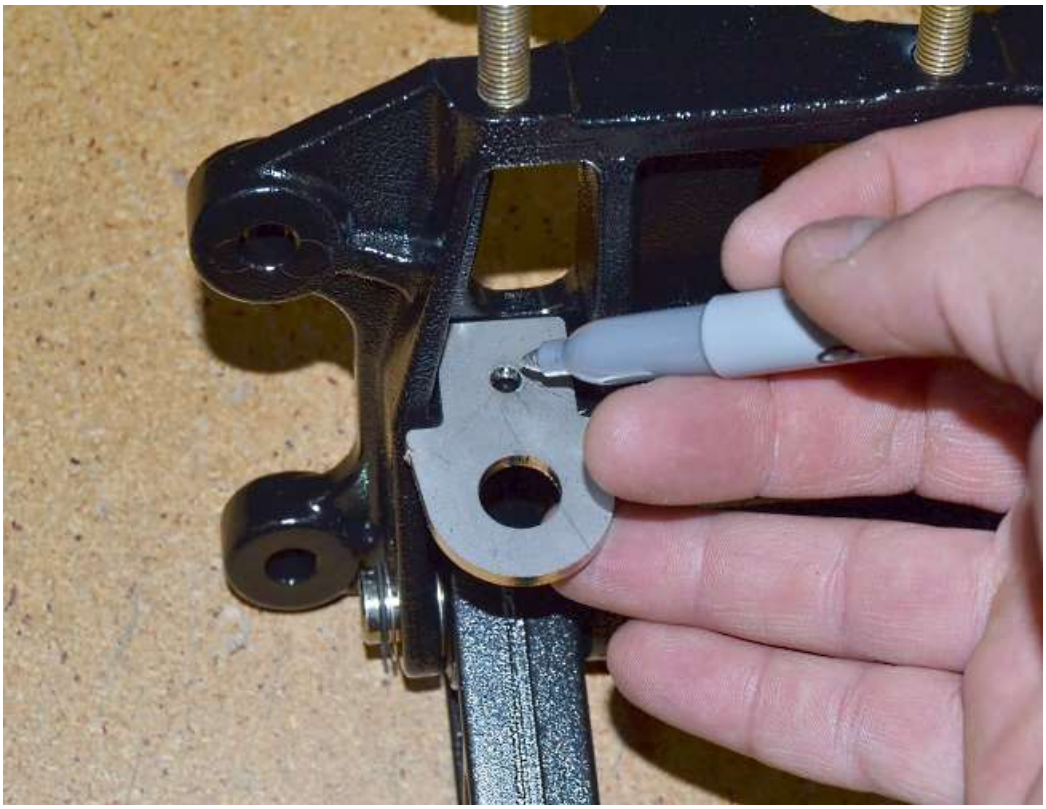

Place the switch mount between the clutch pedal mount tabs on the side closest to the clutch pedal pivot holes and drill a $^{3}/_{16}$" hole through the switch mount hole and the pedal box.

Attach the switch mount to the pedal box using the black #10 screw and locknut.

Connect the switch to the switch mount using a hex nut on each side of the mount bracket.

Clutch Cable Quadrant

✋ Using a cable clutch is only recommended for lower horsepower small block Ford applications. The high clamping loads needed for high horsepower clutches make the pedal very heavy/hard. A hydraulic clutch eliminates the hard clutch pedal.

If using a hydraulic clutch, skip this section.

$^{3}/_{16}$", $^{5}/_{16}$" hex keys, ½", $^{9}/_{16}$" wrenches, ½" socket, ratchet, file, external snap ring pliers.

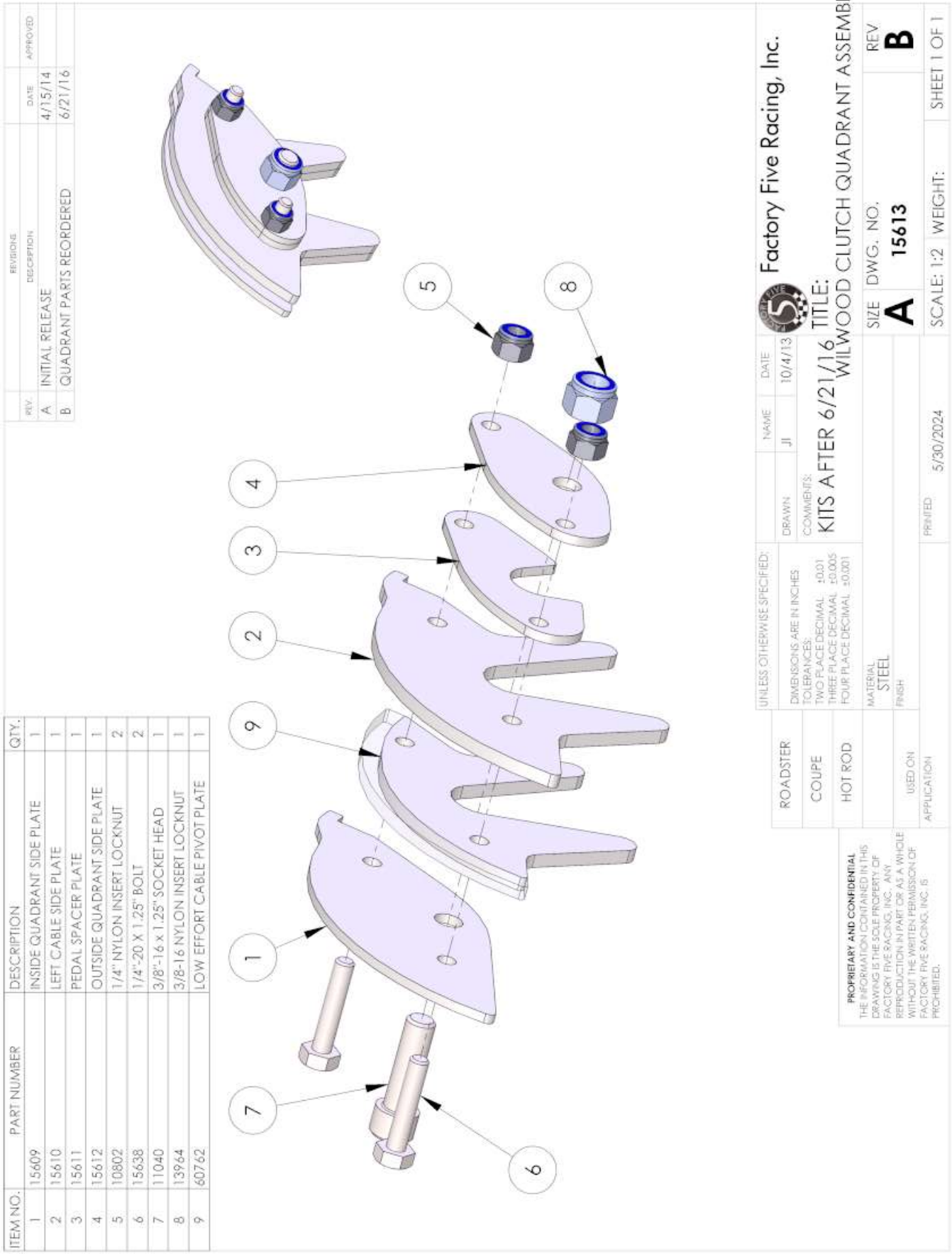

Assemble the clutch quadrant to the Wilwood clutch pedal as shown above.

Use snap ring pliers to remove the clevis at the top of the clutch pedal.

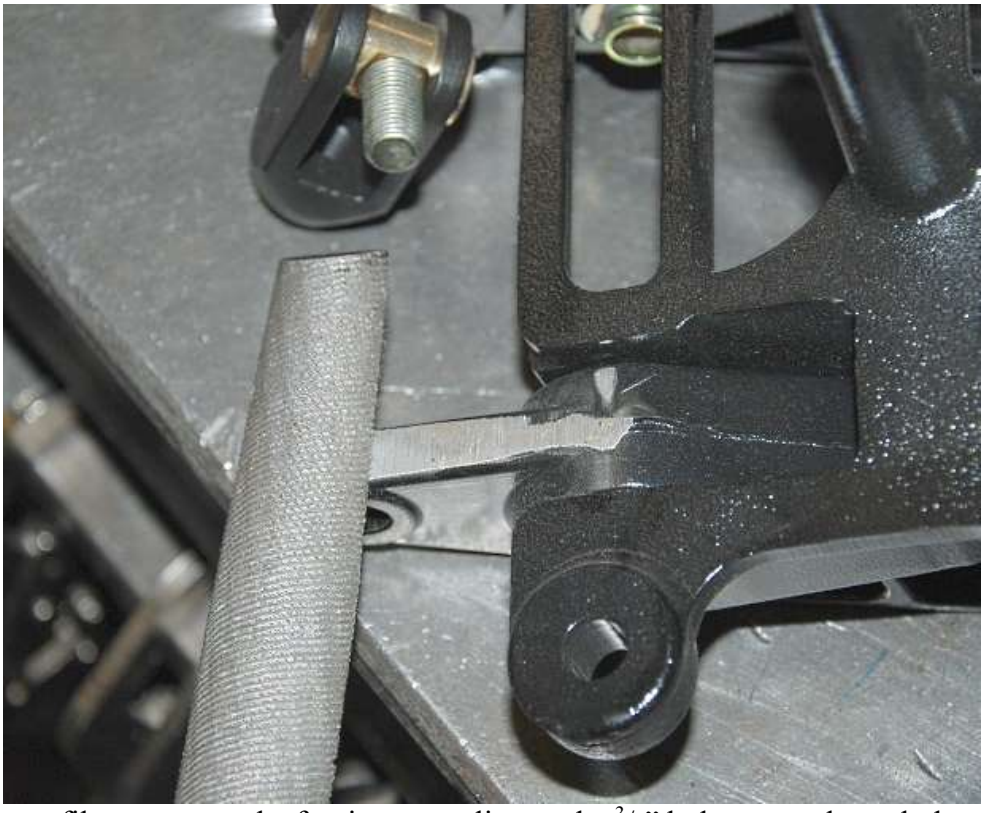

If necessary, use a file to remove the forging centerline so the $^{3}/_{8}$" bolt can go through the clutch pedal hole.

Frame Installation

🛠 $^{7}/_{16}$" socket, ratchet, $^{7}/_{16}$" wrench, ¼" drill bit, drill, $^{5}/_{32}$" hex key

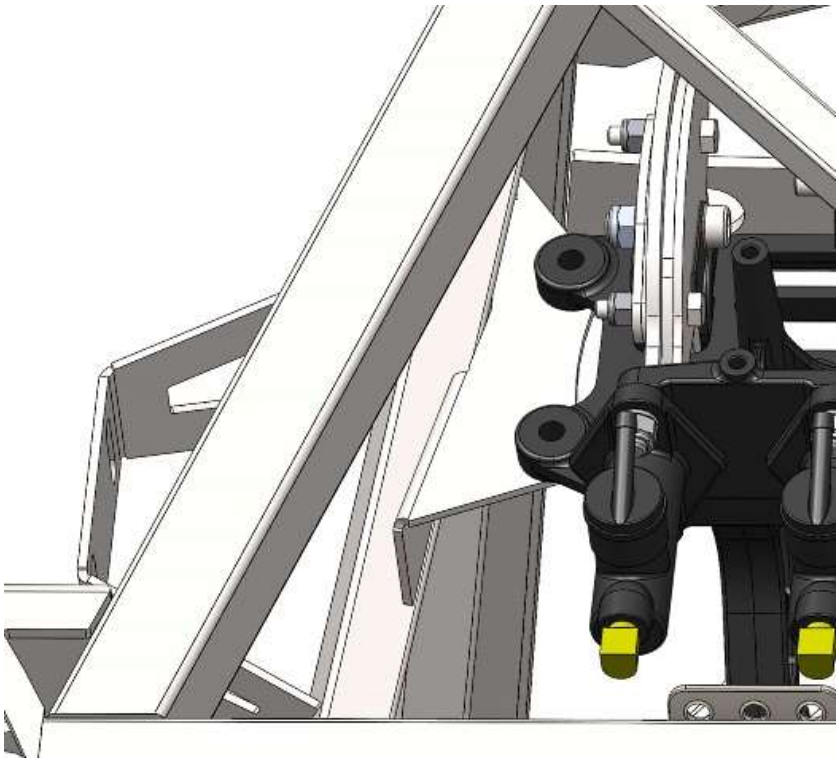

Pedalbox left side mount.

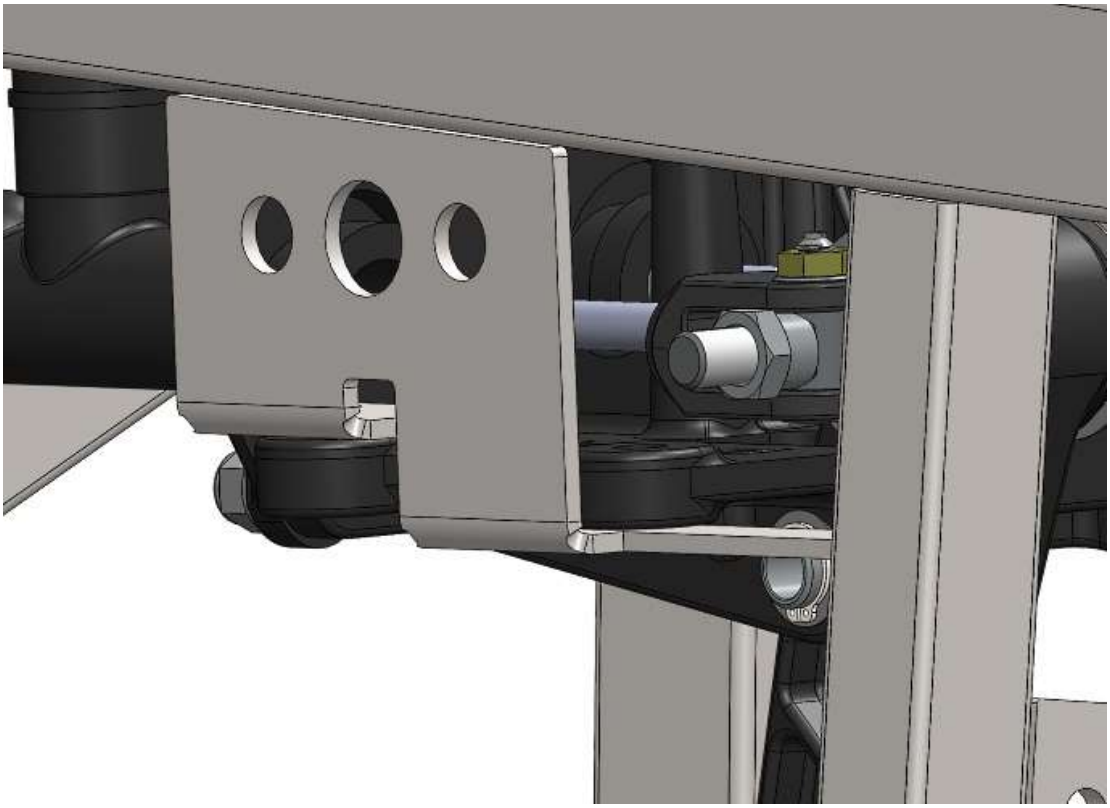

Place the pedal box assembly in the driver's footbox. Make sure that the left side of the pedalbox sits on top of the frame mount and the right side goes on top of the front mount and under the rear mount as shown above.

Attach the Wilwood pedalbox to the mounting brackets using four $^{5}/_{16}$" Button head screws, locknuts, $^{3}/_{16}$" hex key and ½" wrench.

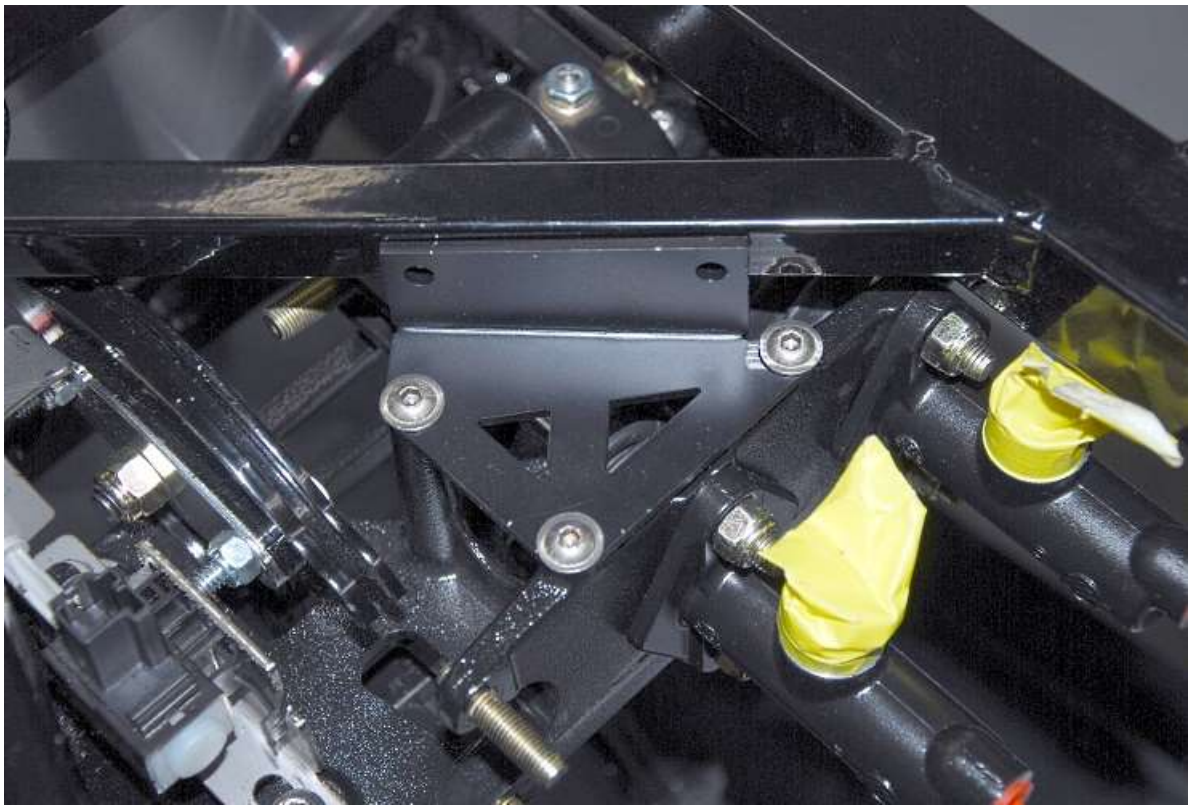

Attach the 60193 pedalbox top mount to the top of the pedalbox using the stainless ¼” x 0.50” flange head screws and a $^{5}/_{32}$” hex key.

Drill through the 1” frame tube through the bracket mounting holes using a ¼” drill bit.

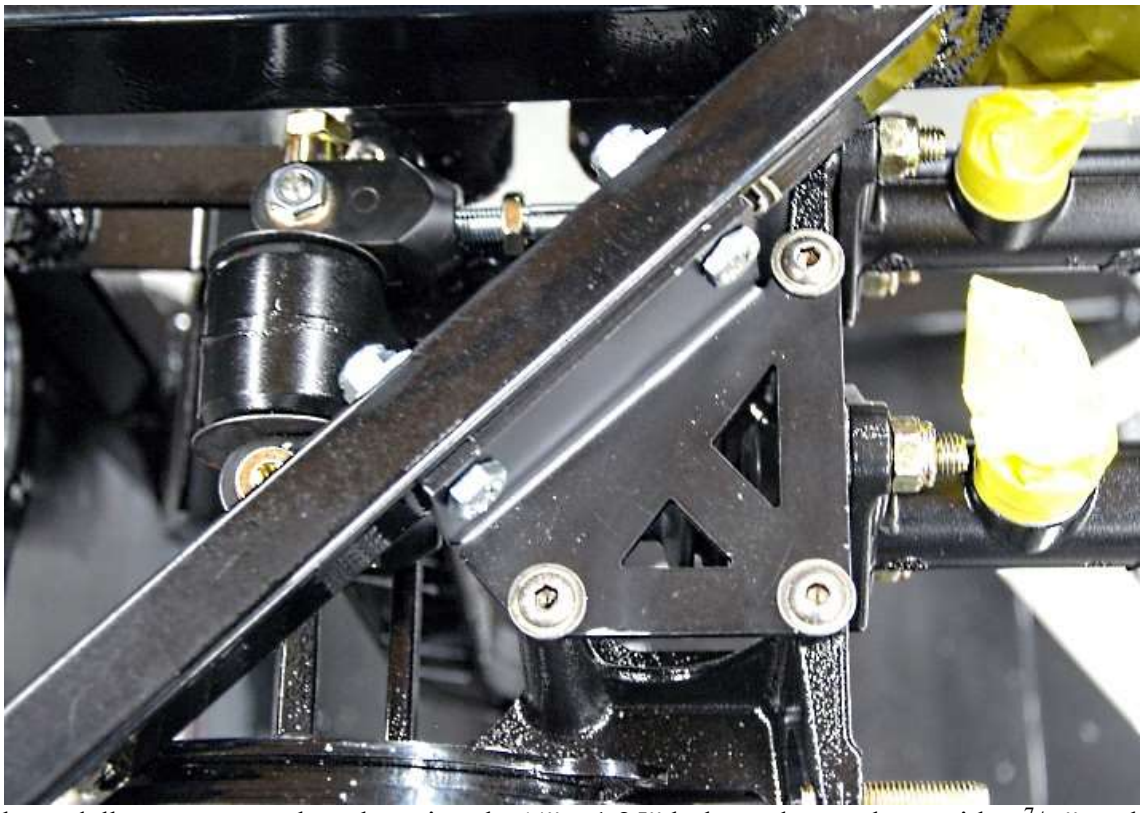

Attach the pedalbox mount to the tube using the ¼” x 1.25” bolts and nuts along with a $^{7}/_{16}$” socket, ratchet, and wrench.

Using Hydraulic clutch

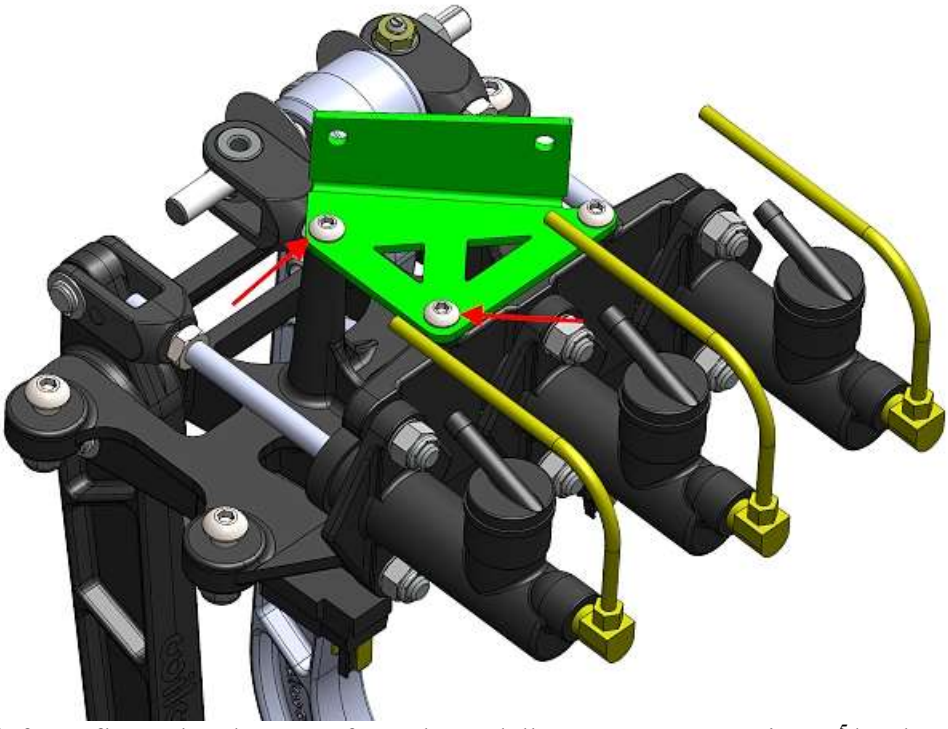

Remove the two left ¼” flange head screws from the pedalbox top support using a $^{5}/_{32}$” hex key.

✋ The next couple steps are for a Coyote Engine install. Look at the Coyote install instructions for full instructions.

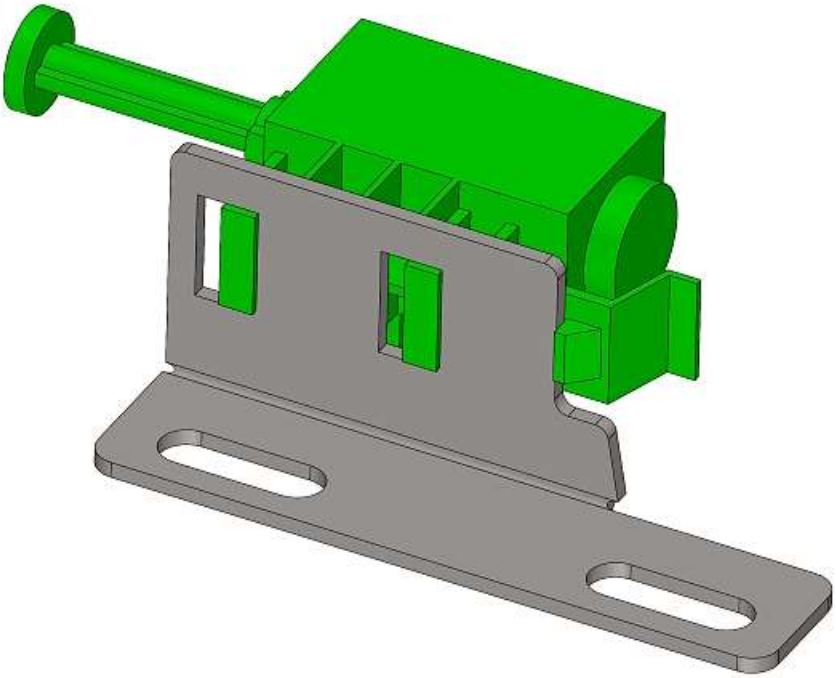

If using a Coyote engine, attach the clutch switch to the bottom travel switch mount as shown.

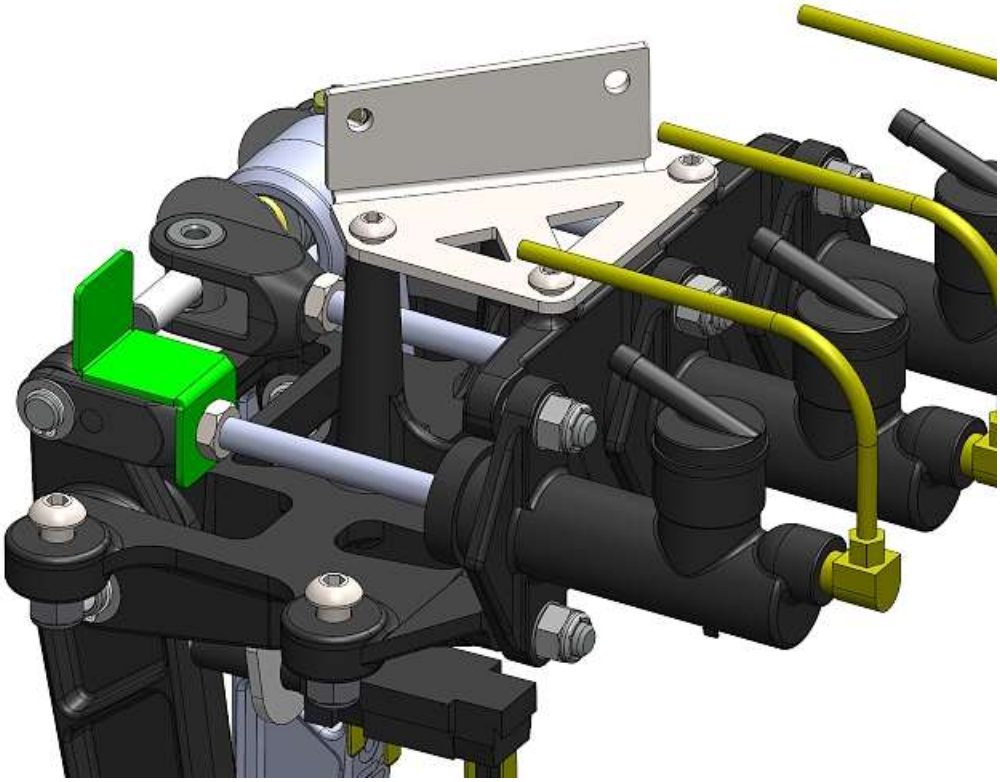

If already installed and using a Coyote engine, unthread the clutch Master cylinder rod from the pedal then place the Hydraulic clutch switch plate on the rod then reinsert the rod into the pedal and tighten the jam nut against the plate.

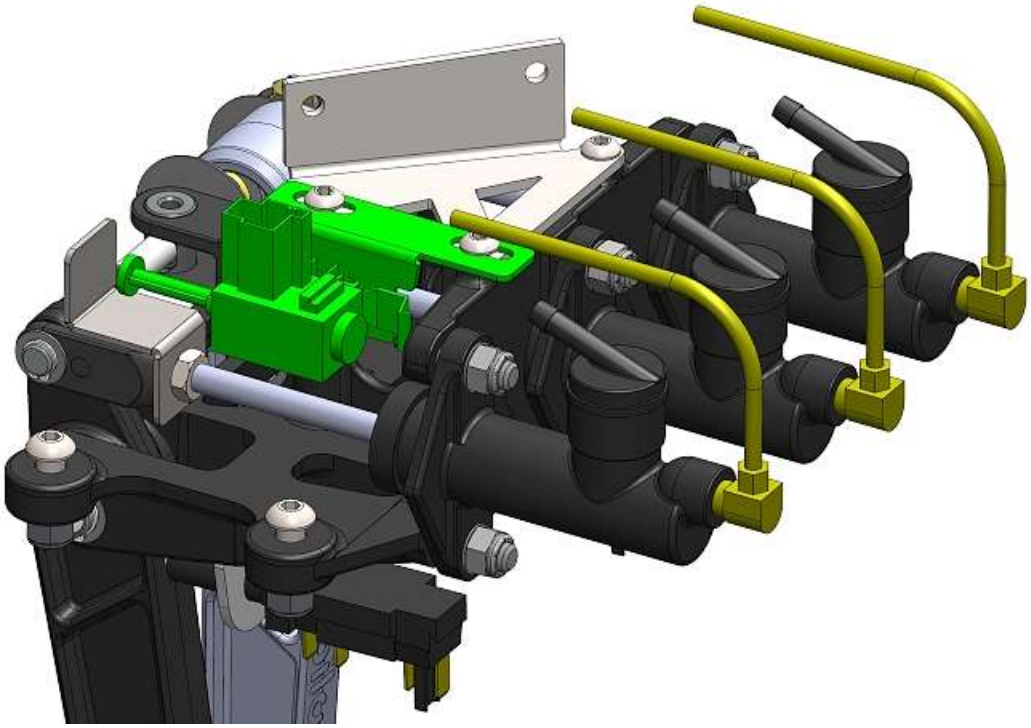

For a coyote, place the clutch switch mount on top of the pedalbox top support and reattach the two left ¼" flange head screws from the using a $^{5}/_{32}$" hex key. Do not fully tighten the screws yet.

Have someone push the clutch pedal all the way in then slide the bottom travel switch mount so that the bottom travel switch is pressed in all the way against the switch plate. Hold the switch mount so that it does not move and let the clutch out then tighten the pedalbox mount screws with a $^{5}/_{32}$" Hex key making sure the switch mount does not move.

Check the throw of the clutch pedal again carefully. The switch should get pressed in all the way but should not get pushed hard enough to stress/move the body of the switch.

Master Cylinders

🛠 6mm socket, ½" deep socket, ratchet, ½" wrench, saw

🚗 Master cylinders

✋ The Master cylinders should get bench bled before getting installed to make sure there is no air in the system.

With the jam nut on the threaded shaft, cut $^{5}/_{8}$" off each of the master cylinders.

Screw the 90° brake line adapter into the end of the master cylinder making sure that the opening points up when tight. This is an NPT thread, be careful not to overtighten.

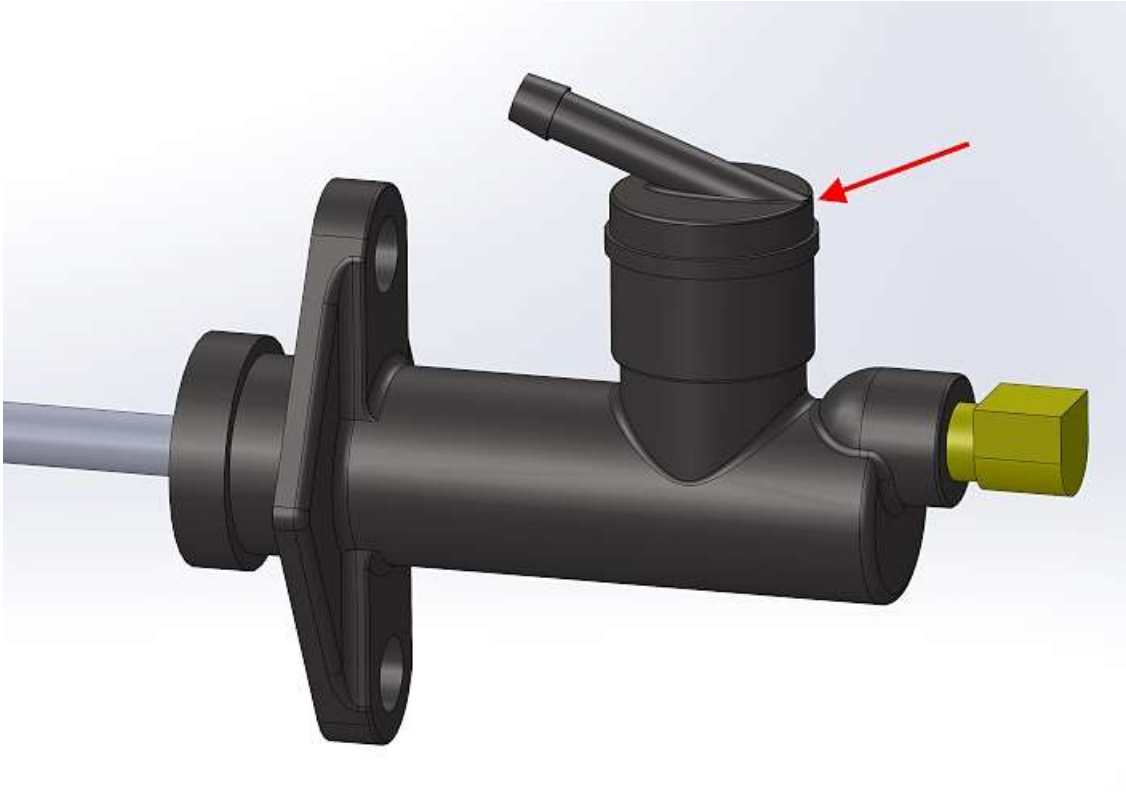

Push the inlet adapter with hose clamp onto each of the master cylinders but do not tighten the hose clamp.

Put one of the ¾” master cylinders onto the brake left master cylinder mount location and turn the threaded shaft into the threaded mount on the brake pedal. As a starting point, thread the shaft in until you can see it is flush on the other side of the mount.

Repeat this for the master cylinder in the right master cylinder mount location for the rear brakes making sure to rotate the inlet adapter in.

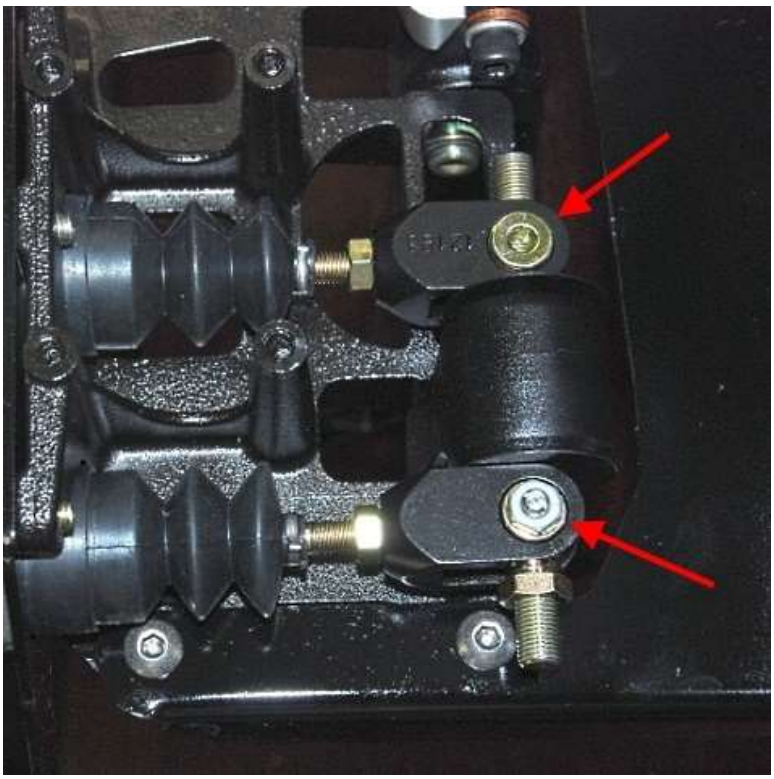

✋ The brake pedal master cylinder pushrod mounts are different from each other. Only one has a screw and nut. This is normal.

Attach and tighten the locknuts using a ½” wrench and ½” deep socket holding the master cylinder to the pedal box then repeat for the other master cylinder.

Tighten the hose clamps on the inlet adapters.

Tighten all the remaining hardware mounting the pedal box to the chassis.

Balance Bar adjustment

The balance bar is an adjustable lever (usually a threaded rod), that pivots on a spherical bearing and uses two separate given that the master cylinders are the same size bore. When adjusted as far as possible toward one master cylinder will push approximately twice as hard on that cylinder as the other, Figure 2.
Threading on pushrod into its respective clevis means threading the other one out the same amount. Sometimes this will lead to "cocked" balance bar when the pedal is in the relaxed position, see Figure 2, "no pedal effort". This is perfectly acceptable if each master cylinder pushrod is completely free of pressure when the pedal is relaxed.

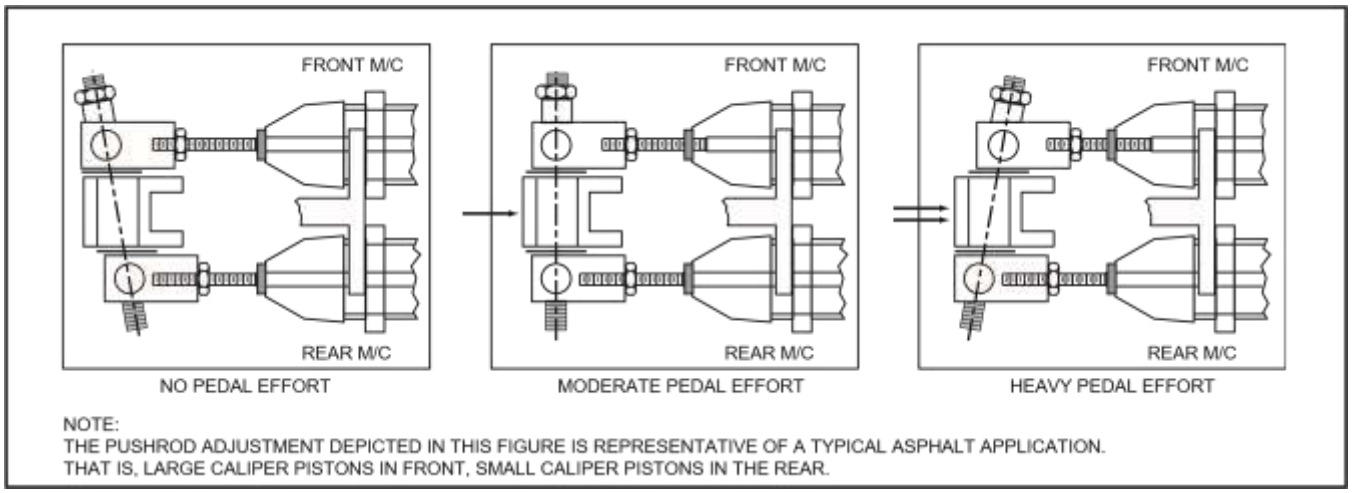

Figure 2. Balance bar lever adjustment

It is important that the operation of the balance bar functions without interference by over adjustment. This can occur when a clevis jams against the side of the pedal or the lever (bolt) hits the pedal bore during any point of pedal travel, Figure 3.

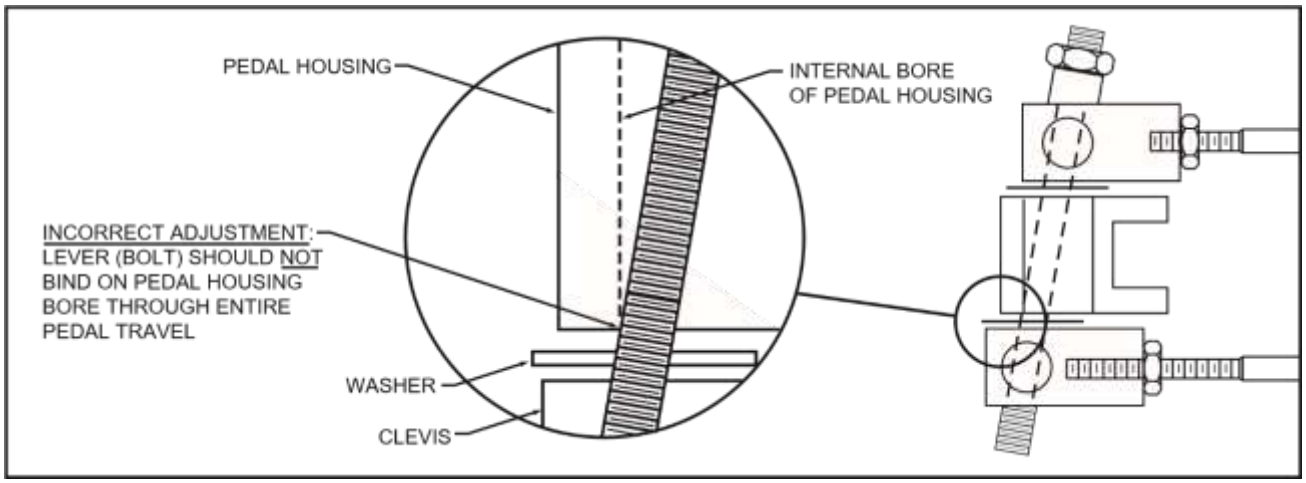

Figure 3. Balance bar lever interference

Lever movement should be unimpeded throughout pedal travel. In the neutral position, clevises should have between 0.20” -0.25” total clearance between the side of the pedal. The large washers between the pedal and clevis should remain loose. Make sure that the master cylinder pushrods remain straight in relationship to the cylinder during entire pedal travel; pushrods should not push the master cylinder pistons at an angle. See Figure 4.

✋ In its non-depressed position, the pedal and balance bar should allow the pushrod of the master cylinders to fully return. This can be checked by feeling pushrods for very slight movement, not loose movement. Master cylinder pistons should be against the retaining snap ring (under boot).

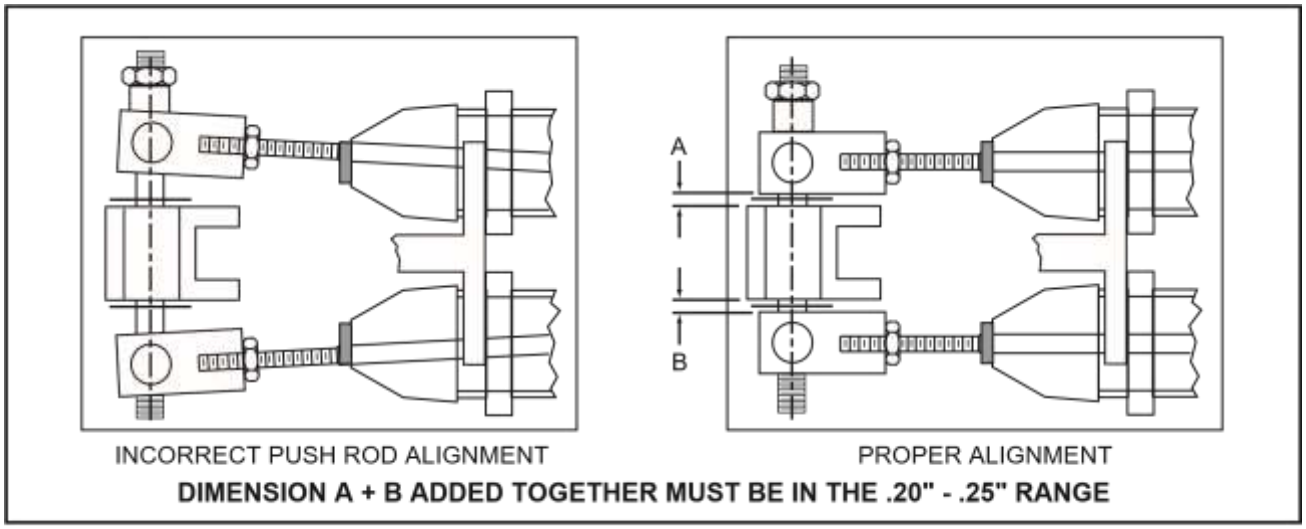

Figure 4. Example of pushrod alignment

Brake balancing can also be affected by changes made in the following:

- Master cylinder size.
- Caliper piston size.
- Use of a proportioning valve.

Warning – If the Master cylinder pushrods are not straight, it will cause side loads on the master cylinder which will lead to a master cylinder failure.

Accelerator Pedal

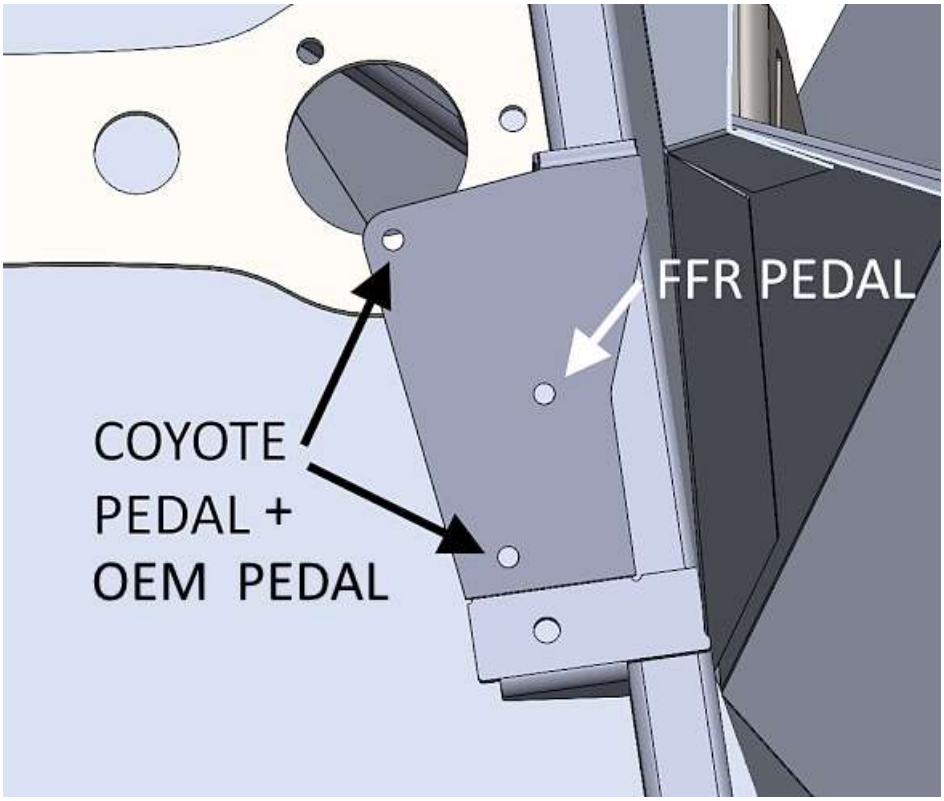

There are two pedal locations provided on the frame that will do three different pedals.

OEM Mustang

🛠 $^{7}/_{16}$" wrench, $^{7}/_{16}$" socket, ratchet, pliers, marker
✋ OEM accelerator pedal, accelerator cable components (Box 7)

Hold the accelerator pedal up to the mount on the front of the foot box. The higher you can mount the pedal the better the pedal will be positioned on your foot. Make sure there is still room at the top of the accelerator pedal on the front of the footbox for the accelerator cable to come through. Attach the accelerator pedal to the mount using the ¼"x ¾" hex head bolts and lock nuts.

Cut the accelerator pedal capture in the corner using a pair of wire cutters.

Slip the accelerator cable through the cut so that the ball will sit in the recess.

Push the capture into the end of the throttle pedal.

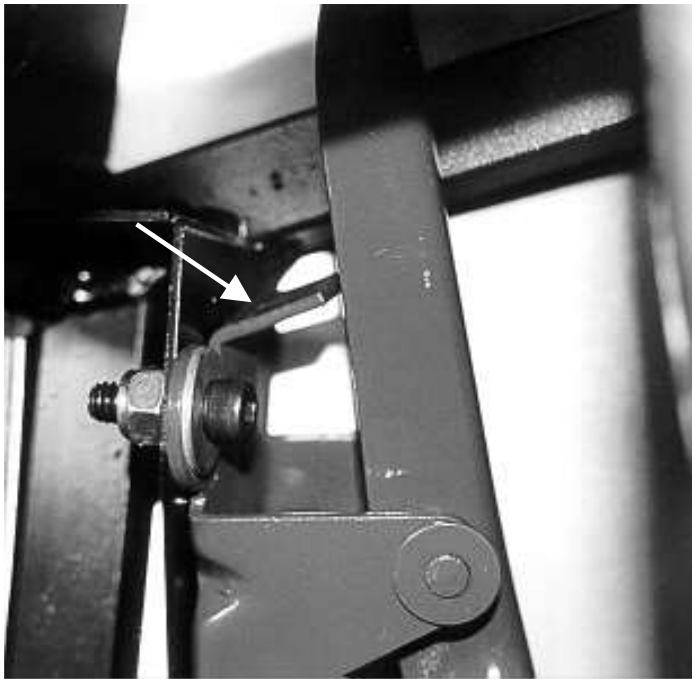

Check the full range of the accelerator pedal travel to ensure that there are no interferences with the pedal or travel.

Complete kit Accelerator Pedal

🛠 $^{5}/_{64}$" hex key, ⅜", $^{7}/_{16}$", ½" wrenches, wire cutter, ¼" drill bit, drill, marker, masking tape.

🚗 Accelerator cable components (Box 7), accelerator pedal components (Box 18), pedal box hardware (Box 18).

✋ The Accelerator cable is designed to be used with all types of engines, carbureted or fuel injected. The stock cable has the barrel end on it for the 4.6L throttle body and the ball for a Mustang accelerator pedal.

✋ If installing a Coyote or other throttle by wire engine, skip this section and see Coyote or LS install instructions.

Unpack the throttle pedal and separate the lower arm from the center mount using the included hex key.

Roughly adjust the pedal as shown and reinstall the washer and screw. The pedal will get adjusted later after install.

Attach the ball stud to the top hole in the pedal using a $^{5}/_{16}$" wrench and $^{3}/_{8}$" socket.

This will allow the cable to come out of the firewall straight and not rub on the side of the cable sheath too much.

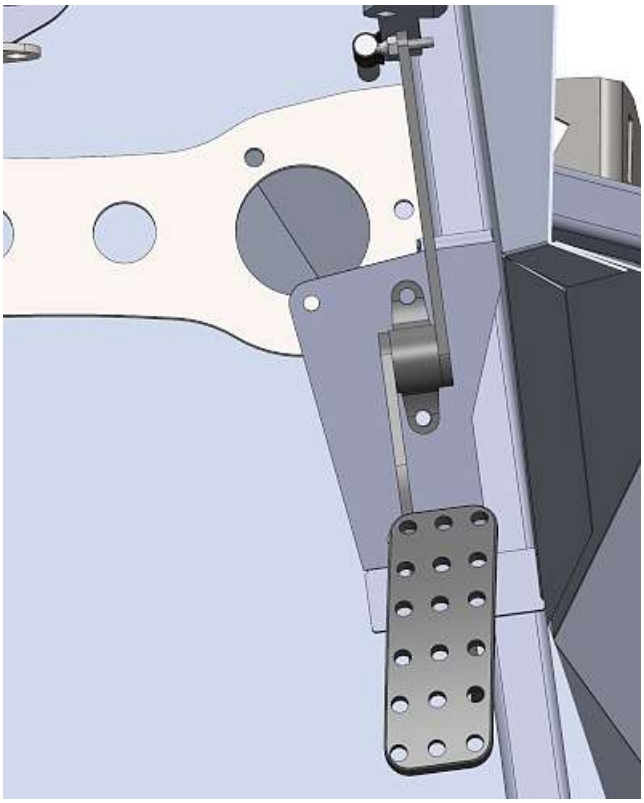

Use one ¼”x ¾” socket head screw and ¼” locknut from the pedal box hardware in the bottom hole to locate the pedal up and down.

The upper pedal hole will need to get drilled depending on the location desired. Position the accelerator pedal so that the pedal pad is at a comfortable height on your foot and there is still room at the top of the accelerator pedal on the front of the footbox for the accelerator cable to come through.
Mark the accelerator pedal mount hole then drill the plate using a ¼” drill bit.

Bolt the top of the pedal to the mount plate using a ¼”x ¾” screw and locknut.

Rotate the pedal so the top of the pedal where the accelerator cable will attach is 1.50” away from the front of the footbox and mark the front of the footbox directly in front of the ball stud.

✋ If running a 4.6L engine, do not do the next steps, the cable is designed for the pedal.

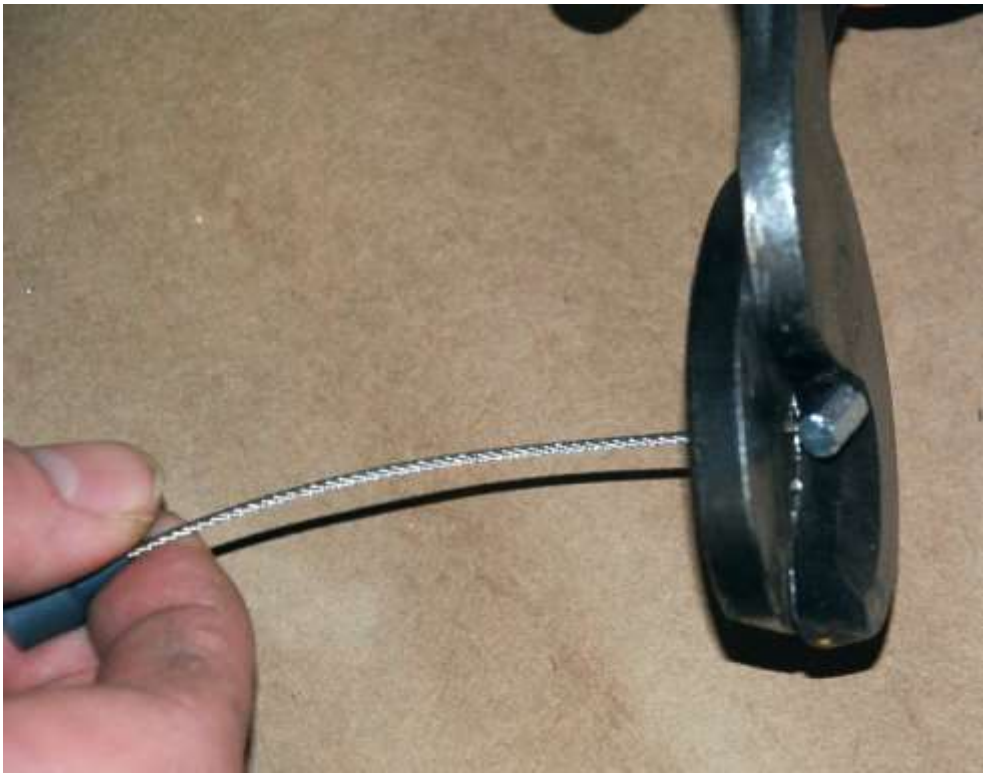

Unpack the throttle cable and cut the cylinder end off. Make sure your cutters are very sharp so as not to fray the cable.

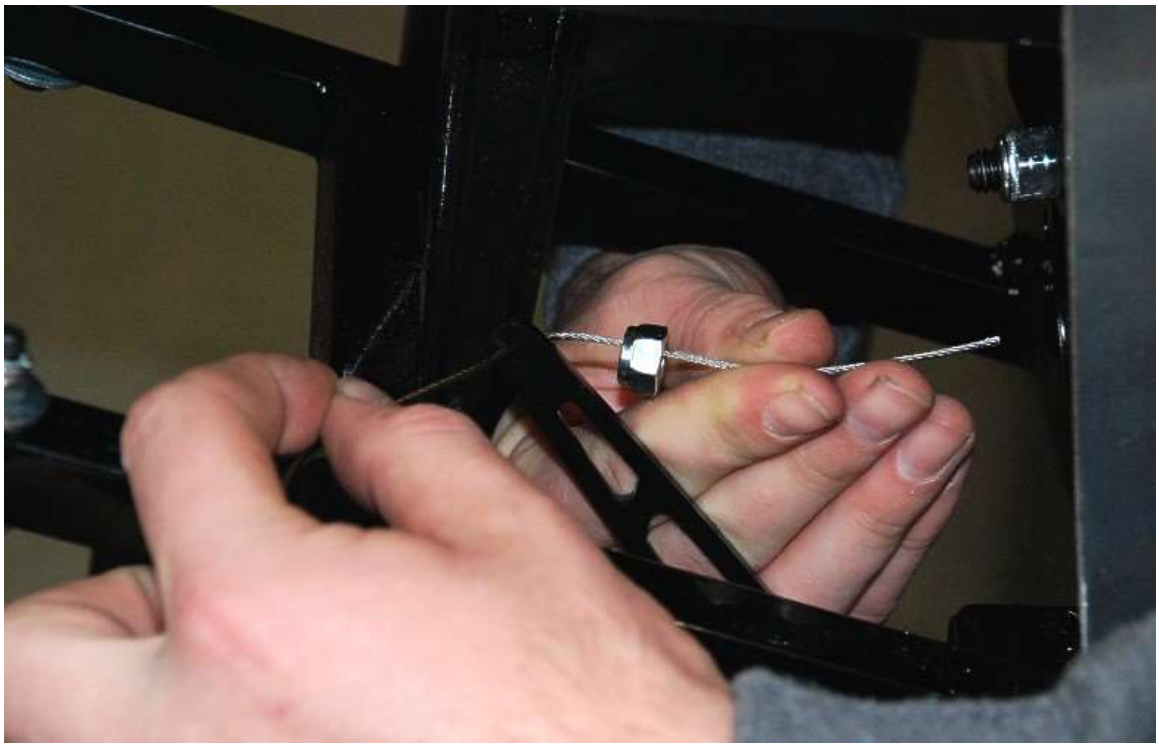

Thread the inner cable through the cable retaining lock nut from the accelerator cable components assembly.

Route the cable through the hole in the firewall and slide the sheath back over the cable.

Tighten the cable sheath to the firewall with the retaining nut. A piece of tape on the end of the cable will help prevent it from backing out of the sheath.

Bend the top part of the pedal sideways so that the ball stud retainer lines up with the accelerator cable.

The remainder of the install will get done after the engine install.

Rivet Spacing Tool

Packaged Aluminum

In most cases we use a 3” rivet spacing when mounting aluminum panels to the chassis and a 2” spacing when mounting panel to panel. The rivet spacing tool has this hole spacing marked. The distance from the edge of the tool to the holes is correct to center the rivets on the ¾” tubes. Align the edge of the tool with the marker line made around the tubes and mark the rivet holes with a marker.

Use the ⅛” rivets for all the aluminum panels unless otherwise directed.

Driver Front Footbox Aluminum

Caulk gun, silicone, clamps
Driver Footbox Front aluminum, ¾” Steering flange bearing (Box 1).

Locate the ¾” flange bearing and (2) $^{5}/_{16}$” x 1” button head screws.

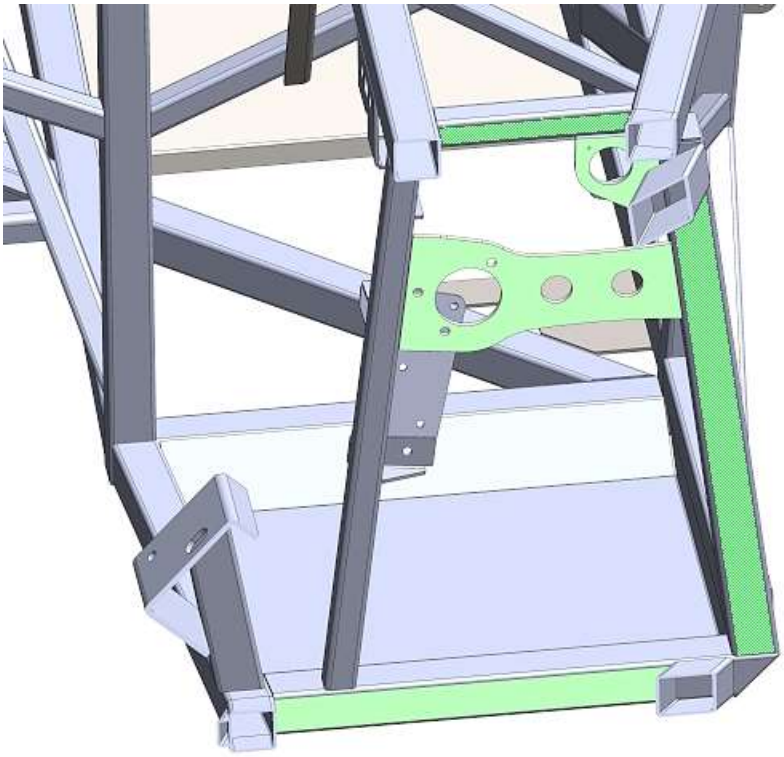

Silicone the frame front of the driver footbox area around the steering bearing, front side of the bottom 1.50” tube, outside 1.50” tube, top 1” tube and the clutch quadrant mount area. Do not silicone the inside vertical tube to allow the inside wall to slip underneath.

Clamp the left side footbox front panel to the frame. Use the flange bearing and screws to locate the panel then remove the bearing.

✋ Do not rivet the panel yet, leave it clamped.

Steering System

🛠 $^{1}/_{8}$", $^{5}/_{32}$", $^{3}/_{16}$" hex keys, ½", $^{9}/_{16}$" wrenches, marker, drill, $^{3}/_{16}$" drill bit, Philips head screwdriver, 15mm deep socket, ratchet.

🚗 Steering bearings (Box 1), $^{5}/_{16}$"x 1" buttonhead screws, Steering system.

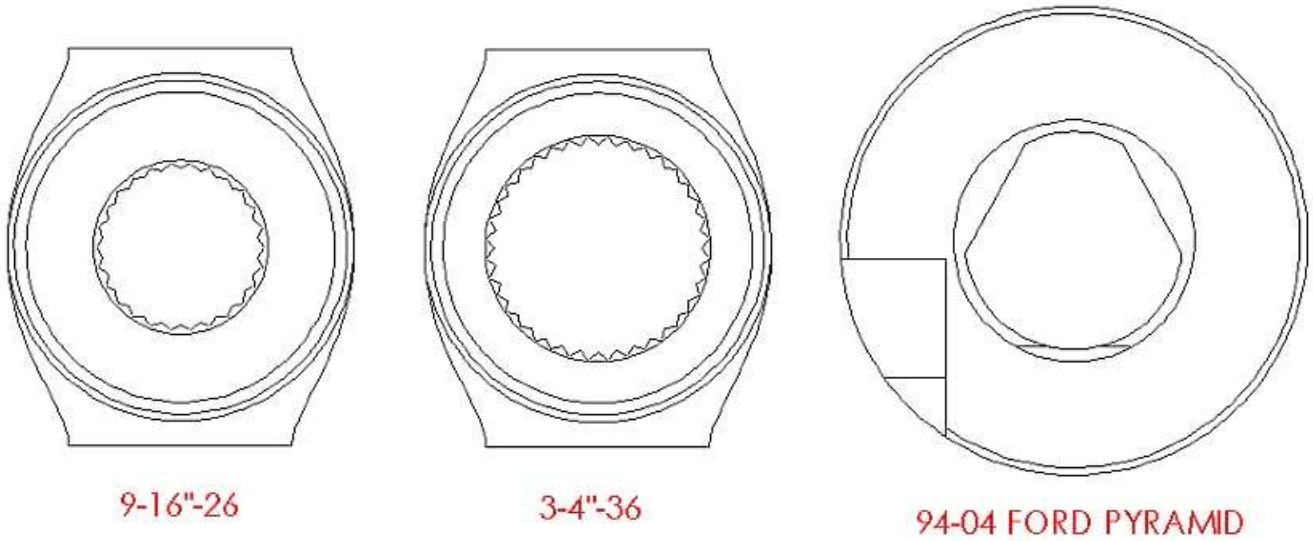

✋ 87-93 Power steering racks have a different spline than a manual steering rack and the 94-04 Power rack uses a "Pyramid" shaped end. All these universal joints are available from FFR.

✋ Unpack the steering parts.

Turn Signal switch assembly

🛠 ¼”, $^{3}/_{8}$” wrench, $^{3}/_{32}$”, $^{1}/_{8}$” hex key, Philips head screwdriver.

🚘 Turn signal components (Box 32)

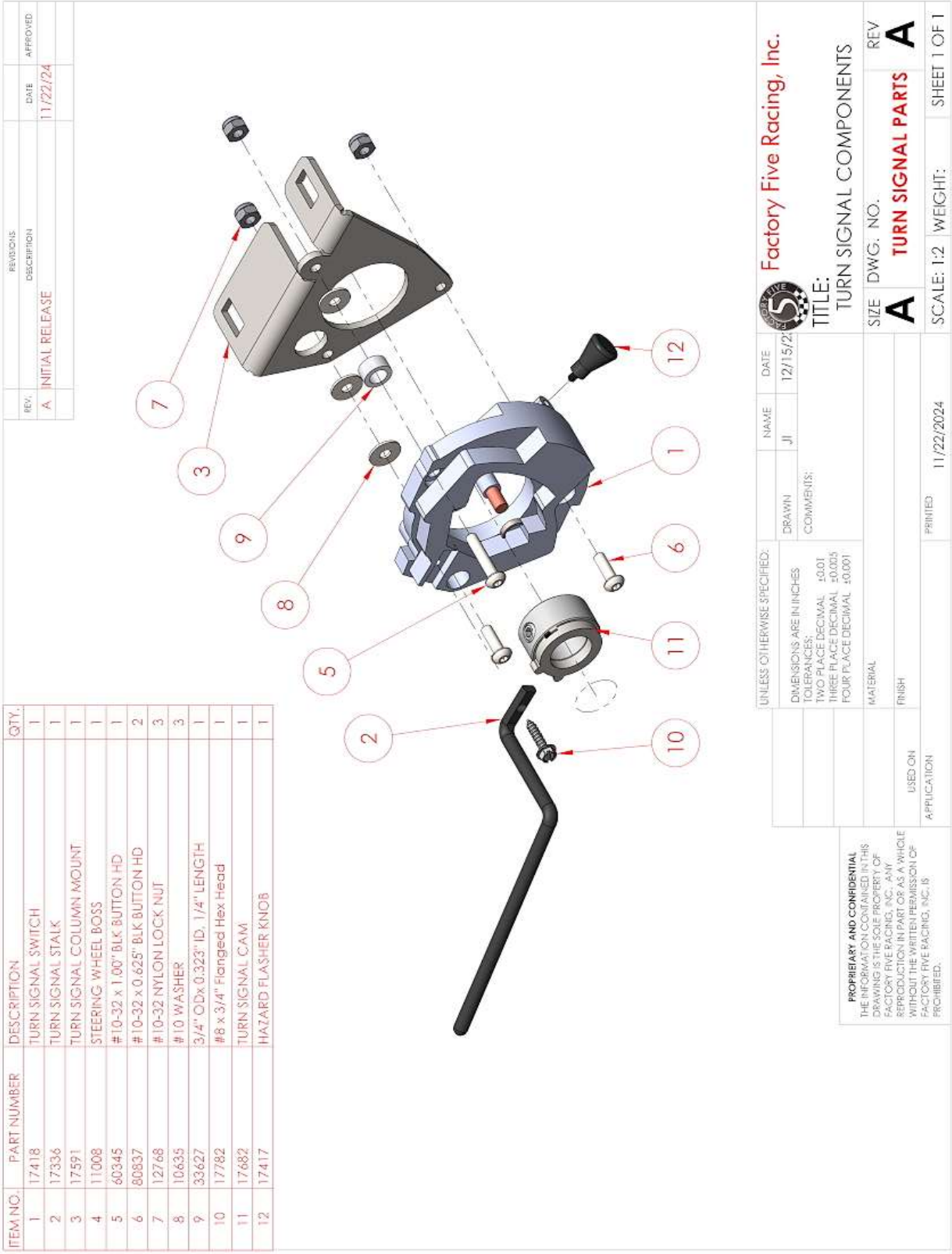

Attach the turn signal switch to the column mount as shown using the screws and spacers. Do not attach the stalk to the switch now.

Attach the column bracket and stalk to the top side of the top steering bearing mount with the bearing on the bottom side. Do not fully tighten the bolts until after the steering shaft is installed.

Bearings

Loosely mount the top ¾” pillow block to the chassis with the set screw toward the rear of the car using $^{5}/_{16}$” x 1” button head screws, $^{3}/_{16}$” hex key and ½” wrench.

Attach the ¾” flange bearing to the front of the footbox with the set screw flange in the engine bay as shown using $^{5}/_{16}$” x 1” button head screws, $^{3}/_{16}$” hex key and ½” wrench. Both halves of the bearing mount go on the front of the footbox.

Loosely mount the middle 1” pillow block to the chassis in the pedalbox area with the set screw toward the front of the car using $^{3}/_{8}$” x 1” button head screws and locknuts, $^{5}/_{16}$” hex key and $^{9}/_{16}$” wrench.

U-Joints

ITEM NO.	PART NUMBER	DESCRIPTION	QTY.
1	17564	6.75" x 1" DD TUBE	1
2	33591	3/4" DD JOINT	1
3	16584	466mm (18.35") STEERING SHAFT	1
4	17565	12.50" STEERING SHAFT	1
5	15840	1" DD U-JOINT x 3/4" DD U-JOINT	1
6	15839	3/4"-36 SPLINE x 3/4" DD U-JOINT	1

REVISIONS			
REV.	DESCRIPTION	DATE	APPROVED
A	INITIAL RELEASE	11/19/24	

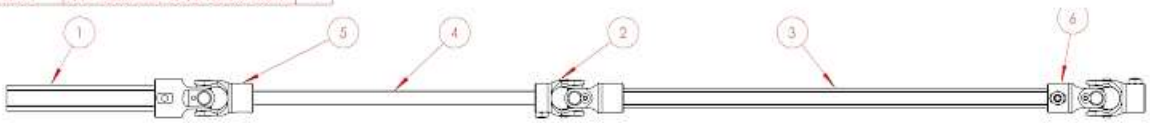

ROADSTER MK5

UNLESS OTHERWISE SPECIFIED:
DIMENSIONS ARE IN INCHES
TOLERANCES:
TWO PLACE DECIMAL ±0.01
THREE PLACE DECIMAL ±0.005
FOUR PLACE DECIMAL ±0.001
MATERIAL
FINISH
USED ON
APPLICATION

DRAWN JI
COMMENTS:
NAME DATE
PRINTED 11/19/2024

PROPRIETARY AND CONFIDENTIAL
THE INFORMATION CONTAINED IN THIS DRAWING IS THE SOLE PROPERTY OF FACTORY FIVE RACING, INC. ANY REPRODUCTION IN PART OR AS A WHOLE WITHOUT THE WRITTEN PERMISSION OF FACTORY FIVE RACING, INC. IS PROHIBITED.

Factory Five Racing, Inc.
TITLE:
Mk5 STEERING SHAFT
SIZE A
DWG. NO. STEERING SHAFT
REV A
SCALE: 1:5 WEIGHT: SHEET 3 OF 3

Manual steering

Loosen the set screw, align the set screw with the flat side on the input shaft then push the universal joint down onto the rack input shaft spline as far as possible.

If necessary, use a plastic mallet to get the joint onto the spline, it is tight.

Tighten the set screw and jam nut using a $^{5}/_{32}$" Hex key and ½" wrench.

Power steering

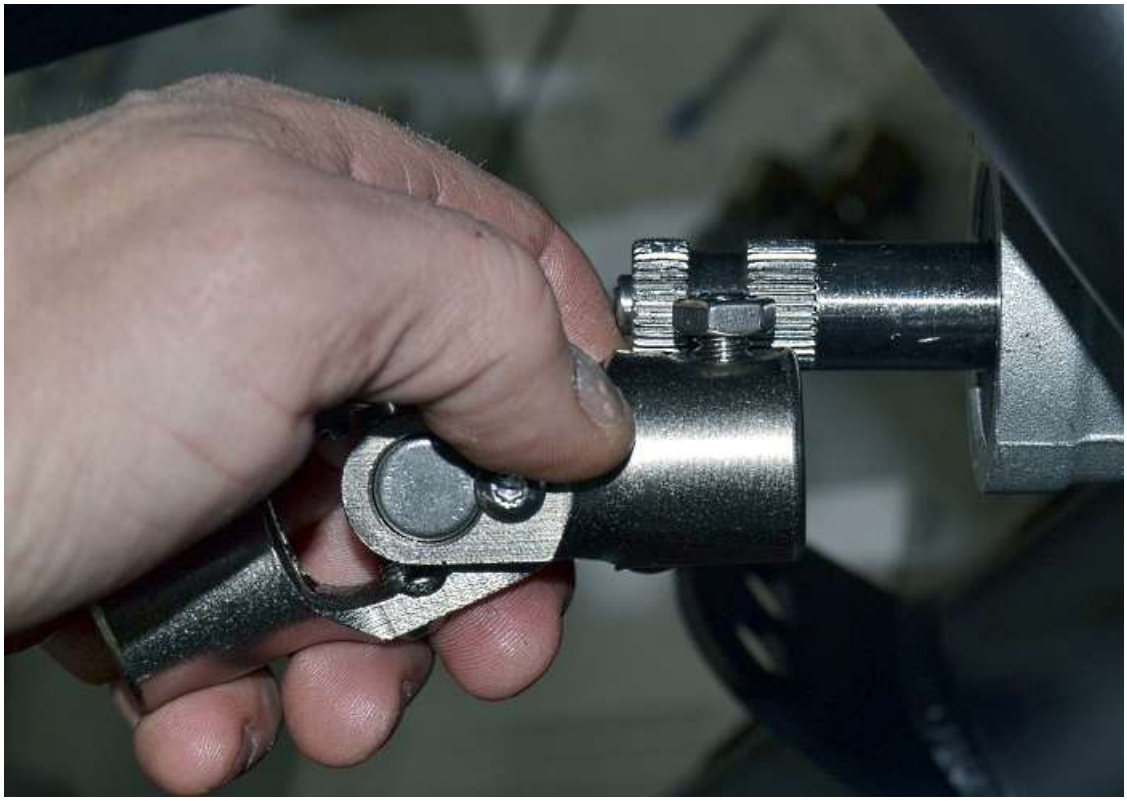

Note the location of the set screw on the splined end of the u-joint compared to the recessed unsplined area in the middle of the input shaft on the steering rack.

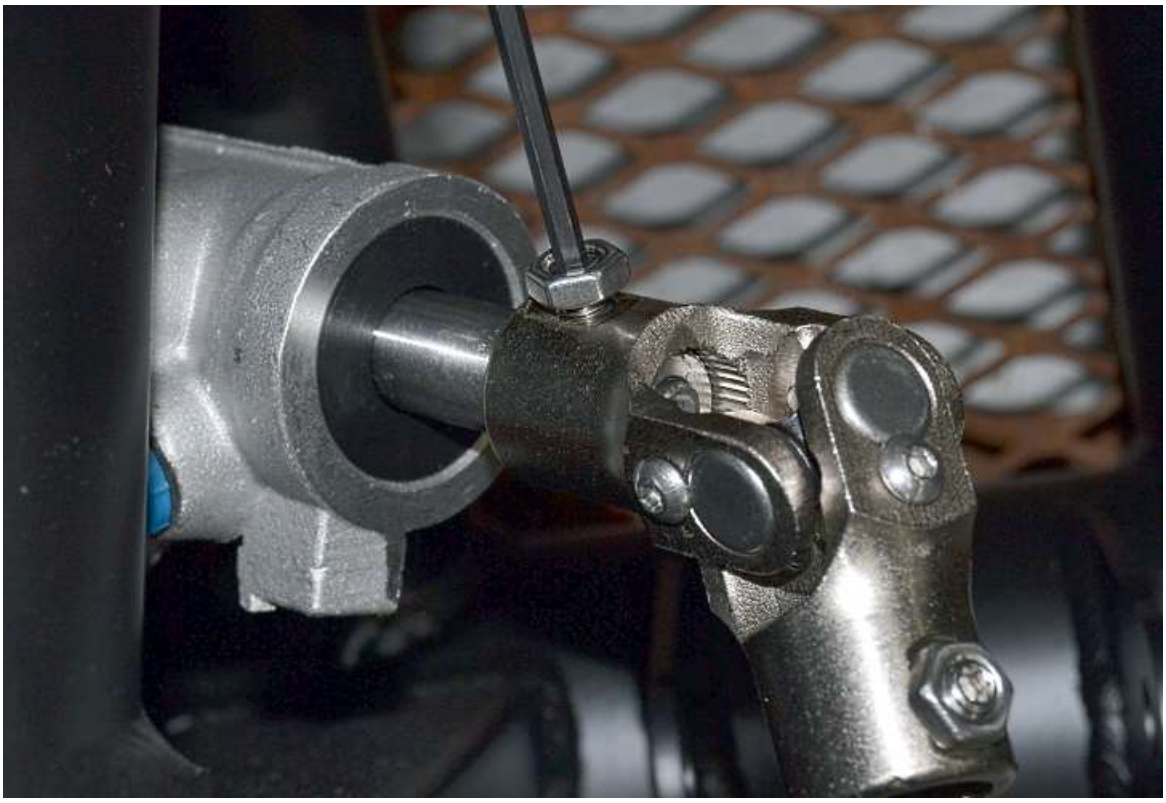

Push the shaft into the steering joint so that the set screw will go into the recessed area on the input shaft then tighten the set screw and jam nut using a $^{5}/_{32}$" Hex key and ½" wrench.

1"DD tube prep

Remove the set screw from the 1"DD end of the 15840 universal joint.

Slide the 1”DD tube into the upper u-joint so that it is flush on the inside of the joint.

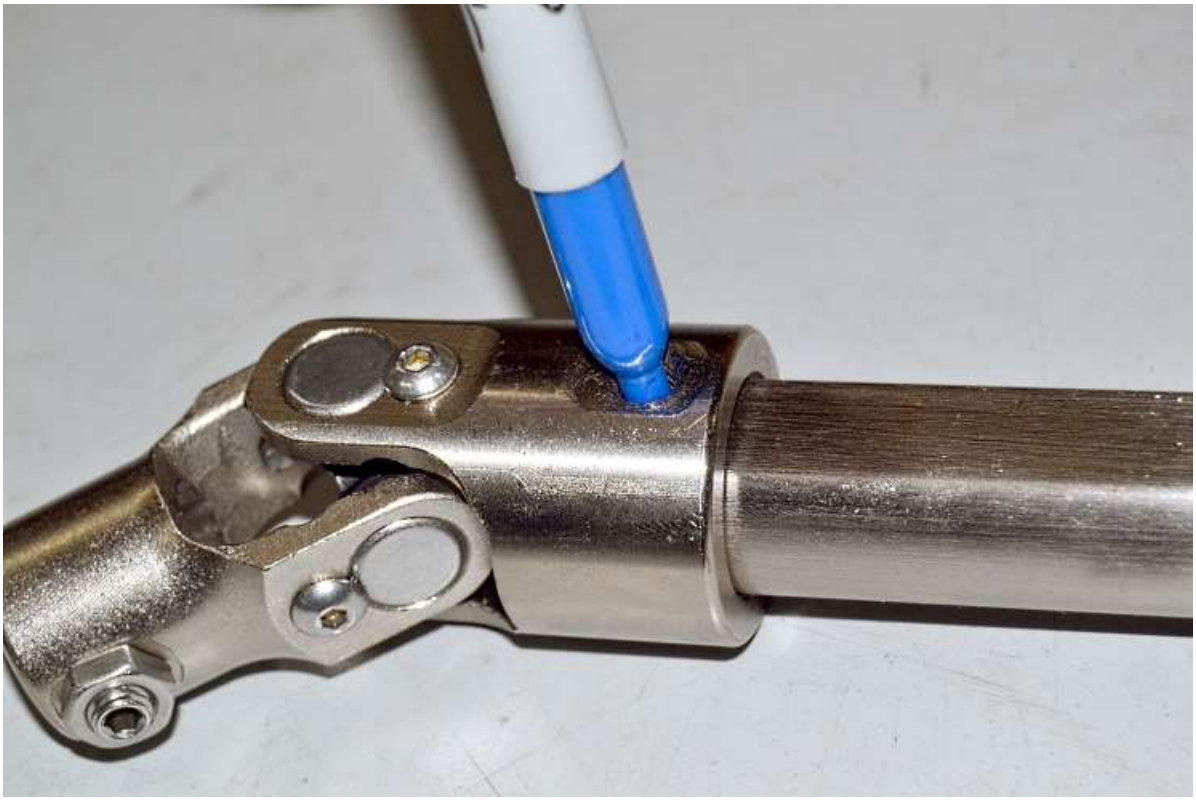

Mark the 1”DD tube through the set screw hole then remove the tube.

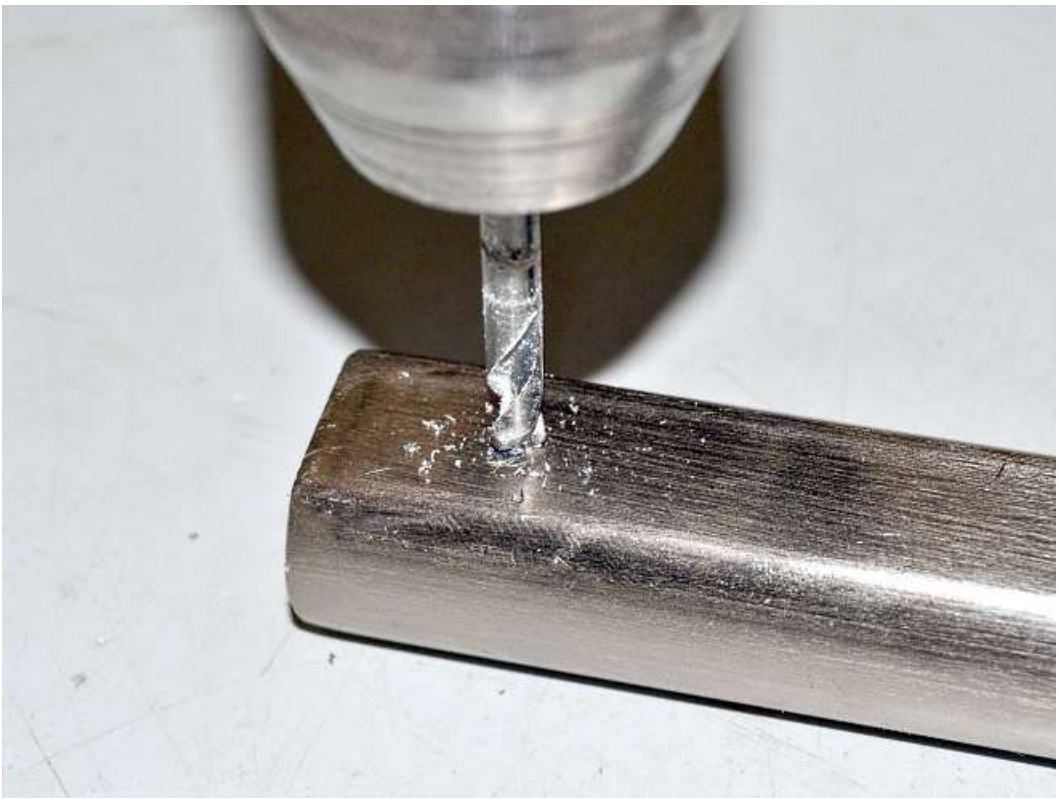

Use a $^{3}/_{16}$" drill bit followed by a $^{5}/_{16}$" drill bit at the point marked to create a slight recess for the set screw.

Reattach the joint to check the fit and position of the recess then remove the tube.

Lower shaft

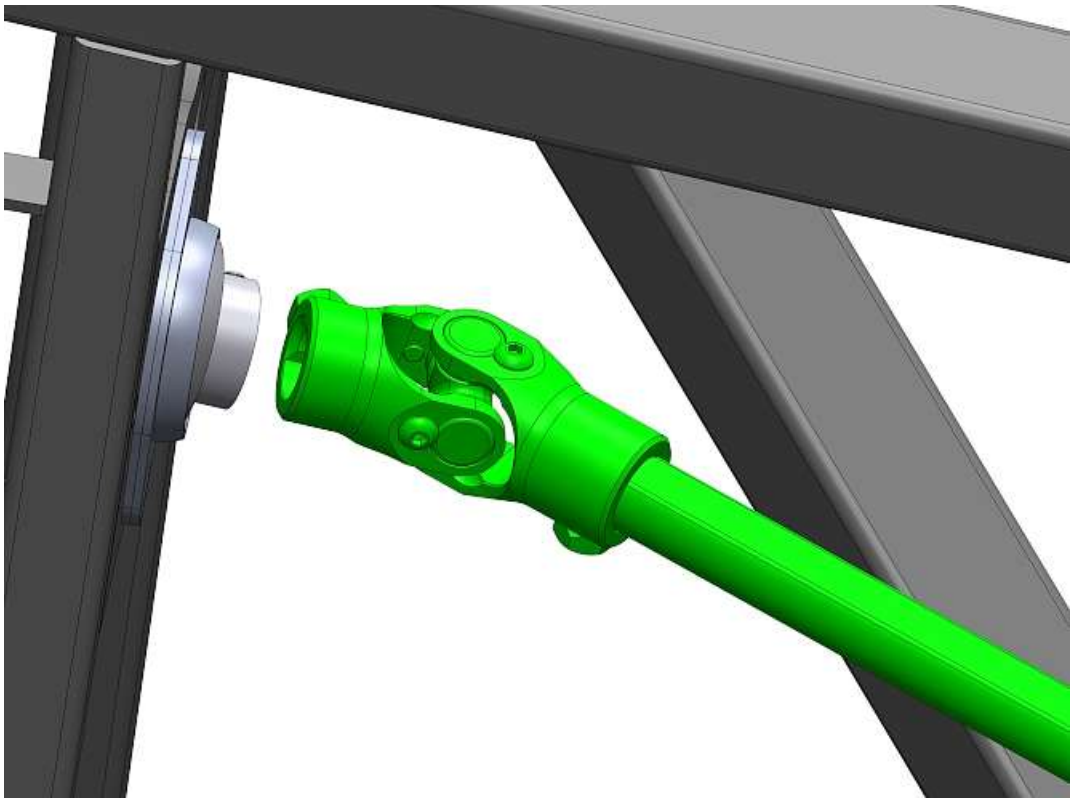

Push the longer end of the ¾” DD u-joint onto the ¾”DD shaft.

Steering shaft mounting

- Do not tighten the shaft set screws until the whole shaft has been installed.
- Check the length of the middle shaft, it may need cutting down to 12.50”

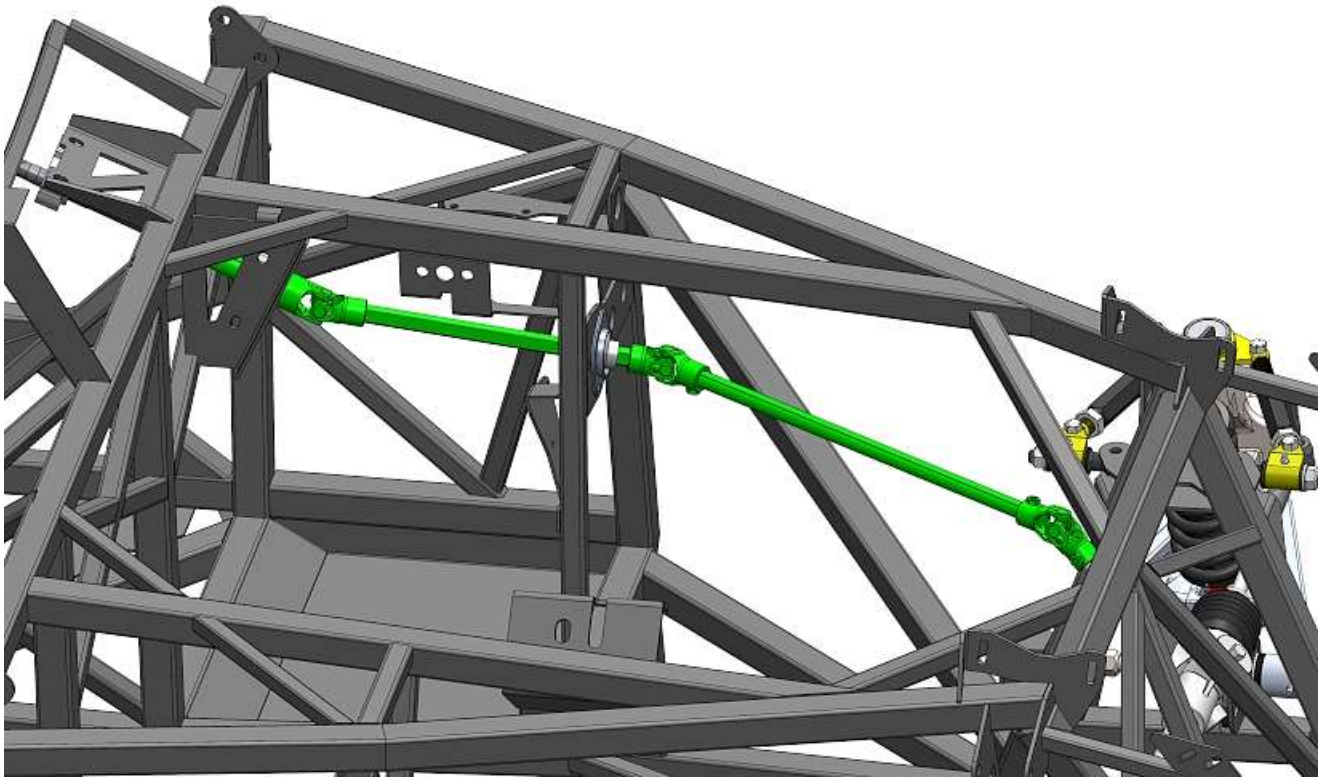

Insert the lower shaft into the steering rack joint.

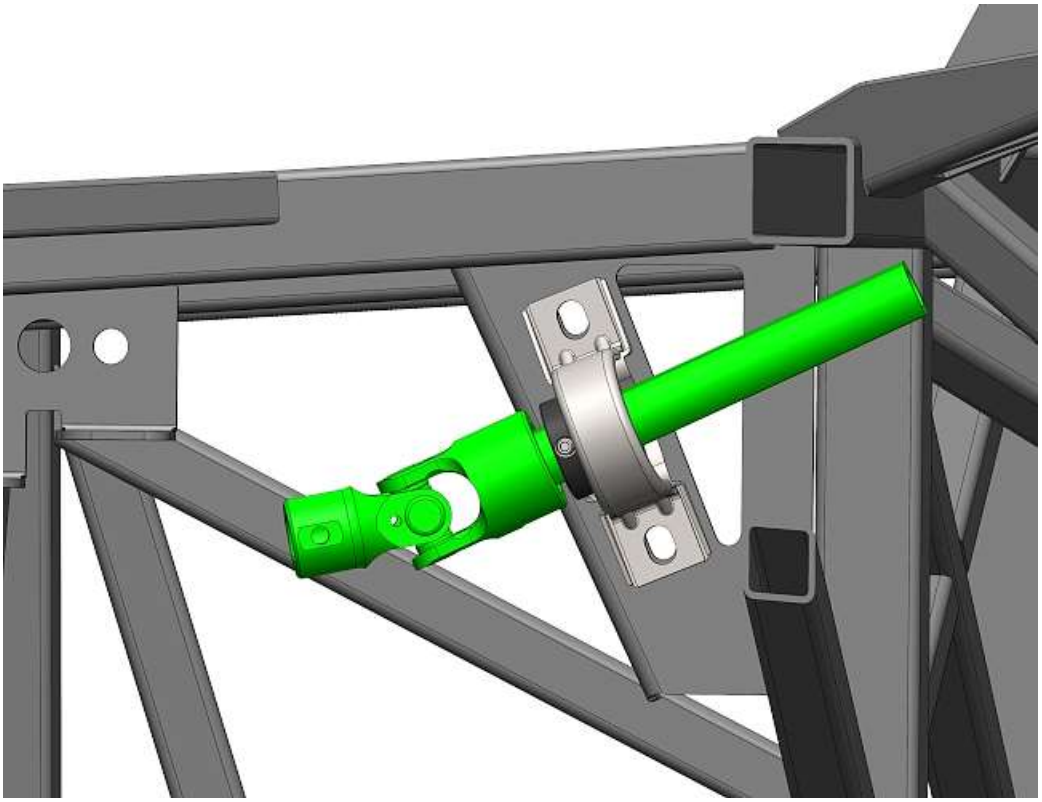

Slide the 1”DD tube through the footbox bearing from the front side.

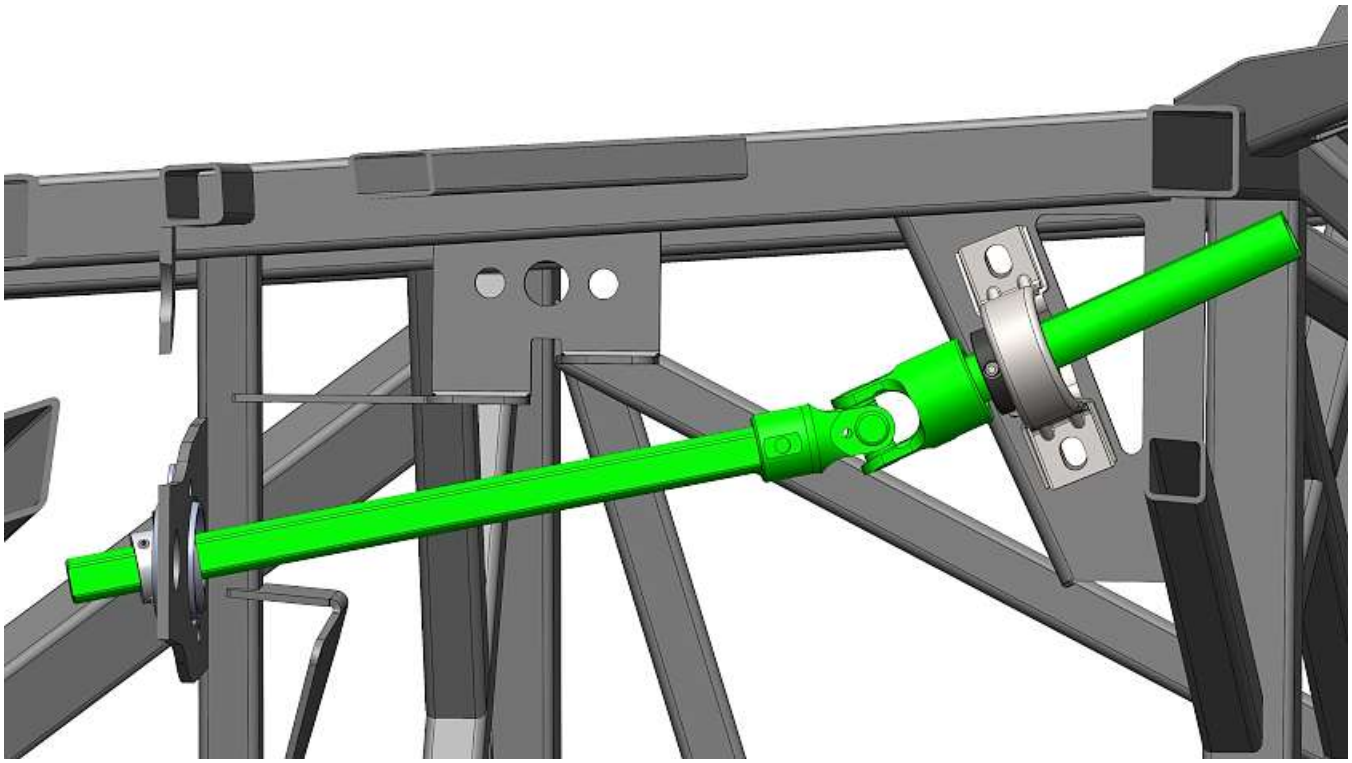

From inside the footbox, slide the 12.50” ¾” shaft into the front footbox bearing then back into the 1” DD joint.

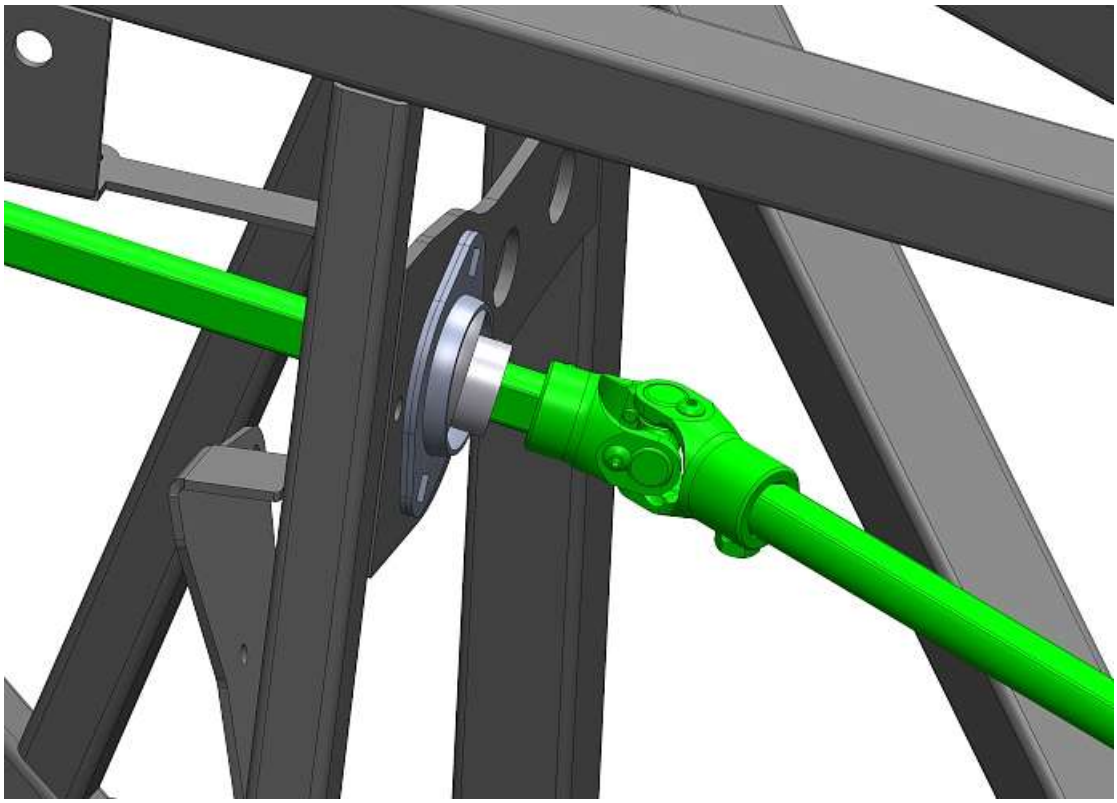

Connect the lower shaft to the shaft going through the footbox.

Push the shafts into the steering joints so that they are flush with the inside of the joint as shown above then tighten the set screw and jam nut using a $^{5}/_{32}$" Hex key and ½" wrench.

Upper Steering Shaft/Turn signal assembly adjustment

🛠 $^{5}/_{32}$", $^{3}/_{16}$", $^{5}/_{16}$" hex keys, ½" wrench, rubber mallet

🚘 Steering system hardware.

✋ Use thread locker on all the steering shaft screws that do not have jam nuts and the adapter screws.

Unpack the upper steering shaft from the primary chassis components box.

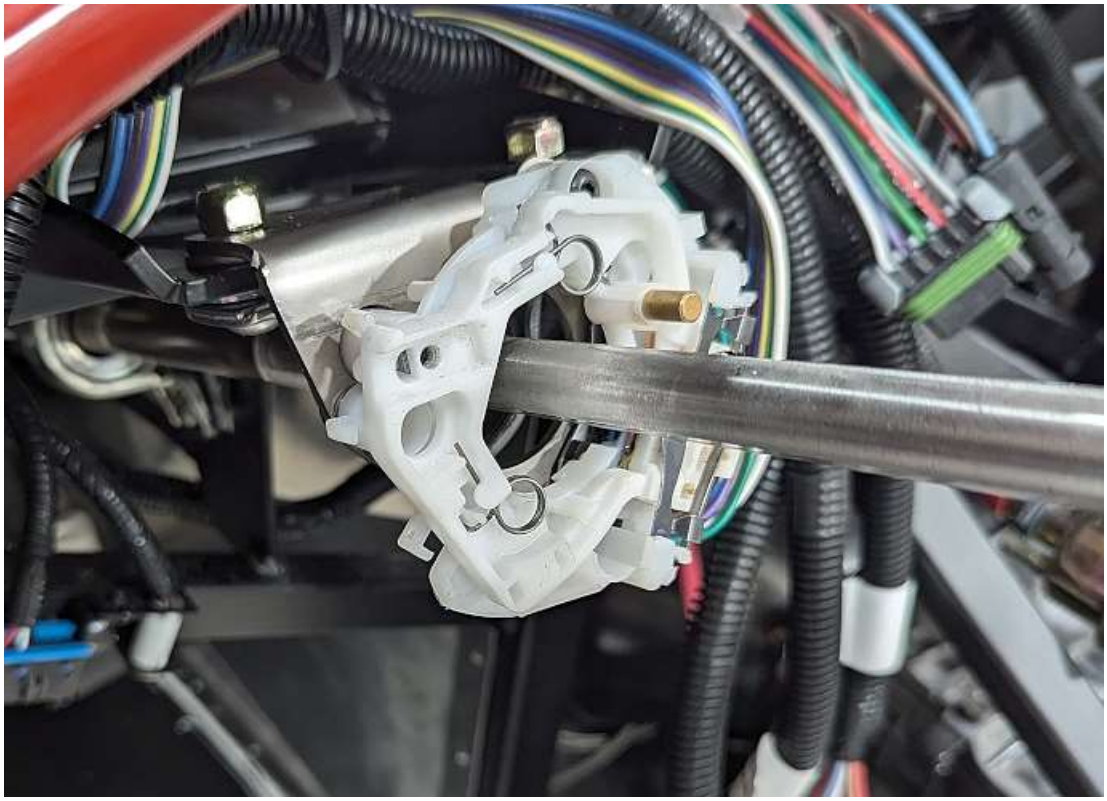

Slide the steering shaft through the turn signal switch; upper bearing and start it in the lower shaft.

Use an adjustable wrench to center the steering rack.
Temporarily attach the turn signal stalk using a ¼” wrench.

Loosen the set screw on the turn signal cam using an $^{1}/_{8}$" hex key and slide the turn signal cam onto the steering shaft.

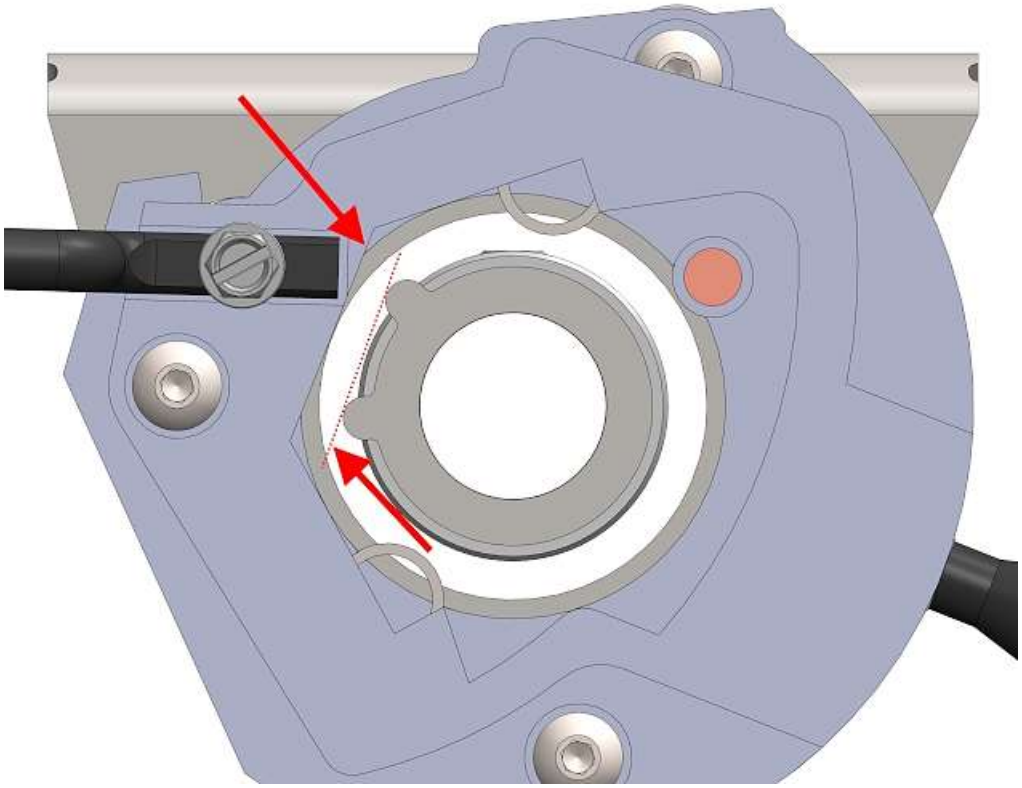

Rotate the cam so that a line between the small ears on the cam would be parallel to the flat part of the switch opposite.

Actuate the switch up and move the cam in and out on the shaft so that the front of the cam is just forward of the circular springs on the switch and the springs only touch the laser cut part of the cam with the ears. The circular springs should not touch the smooth wide circular base of the cam with the set screw in it. Use a marker on the front side of the shaft to mark the location and orientation of the cam.

Pull the shaft out slightly and tighten the cam to the steering shaft with an $^{1}/_{8}$" hex key.

Push the steering shaft back in and align the cam with the switch springs again.

Use an adjustable wrench to rotate the steering shaft and actuate the switch. Try it turning in both directions. The steering shaft should be centered in the switch and the springs should hit the cam the same going in both directions.

If the shaft needs to go up or down slightly the shaft can be moved in multiple ways:

- The middle steering bearing can be adjusted up and down and shimmed out.
- Washers can be added or removed under the top steering bearing.
- Washers can be added or removed between the steering switch mount and the frame.

Once the steering shaft is correctly aligned and the switch works correctly, tighten the steering bearings.

Pull the upper steering shaft out slightly so that the circular recesses are both showing then turn the steering shaft so the recesses are facing up. Set the Bellville washers in place. Then use a plastic hammer to tap the upper shaft down until the upper clip just disappears into the lower shaft.

Cockpit Aluminum

🛠 Drill, ⅛” drill bit, rivet tool, Silicone, caulking gun, #8 self-tapping screws, ¼” nut driver, marker, Acetone or carburetor cleaner, rags.

🚚 Packaged Aluminum (Box 10)

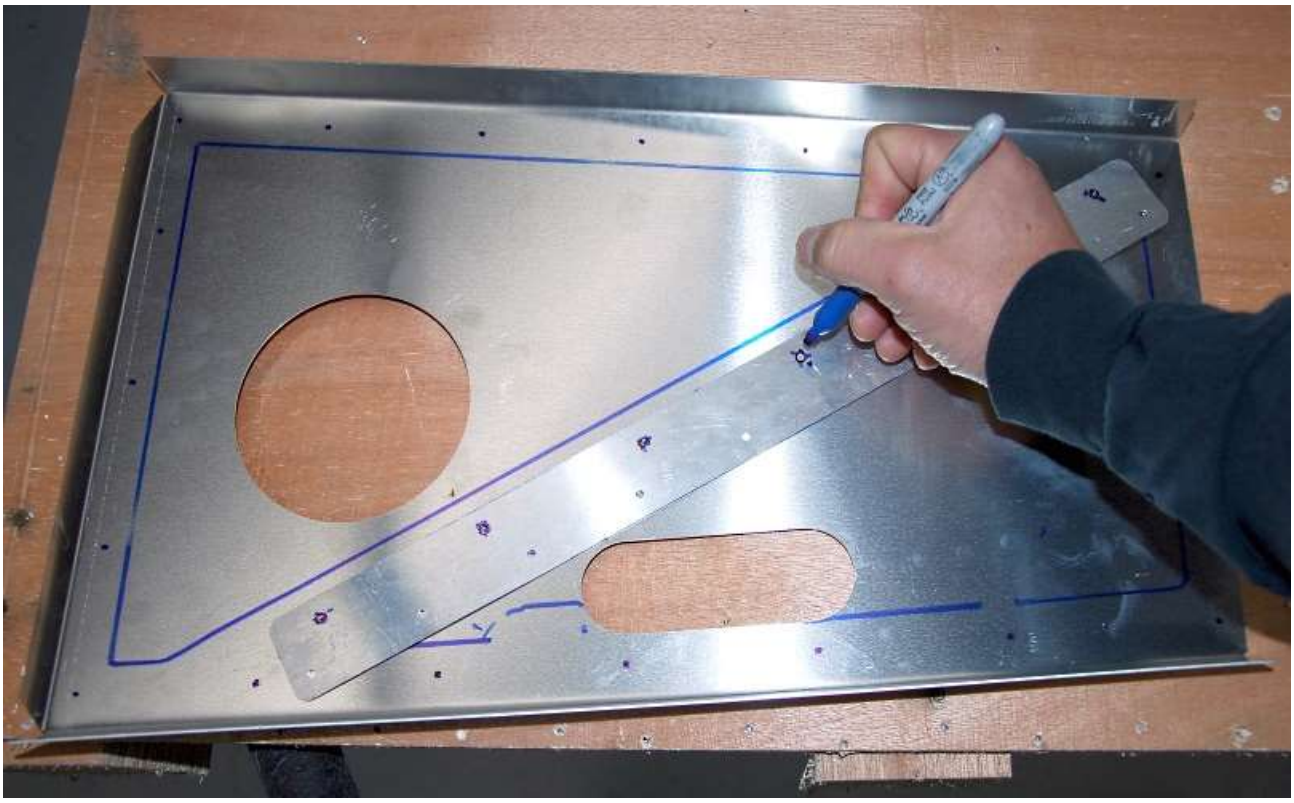

Align the edge of the tool with the marker line made around the tubes and mark the rivet holes with a marker.

Drill the rivet locations using a $^{1}/_{8}$" drill bit.

Right footbox aluminum

Secondary body fasteners (Box 4), kit mounted aluminum.

If installing the Heat-A/C unit, do not drill and rivet the outside footbox panel until the A/C is installed.

Apply silicone to the backside of the panels or chassis (whichever is easier) in the areas where they will make contact.

Locate and hold the right footbox aluminum panels (inside, front, and outside) using the kit # 8 screws originally holding the aluminum to the frame.

Mark and drill rivet holes in the footbox front aluminum into the frame tubes using a $^{1}/_{8}$" drill bit.

Rivet the panel to the frame.

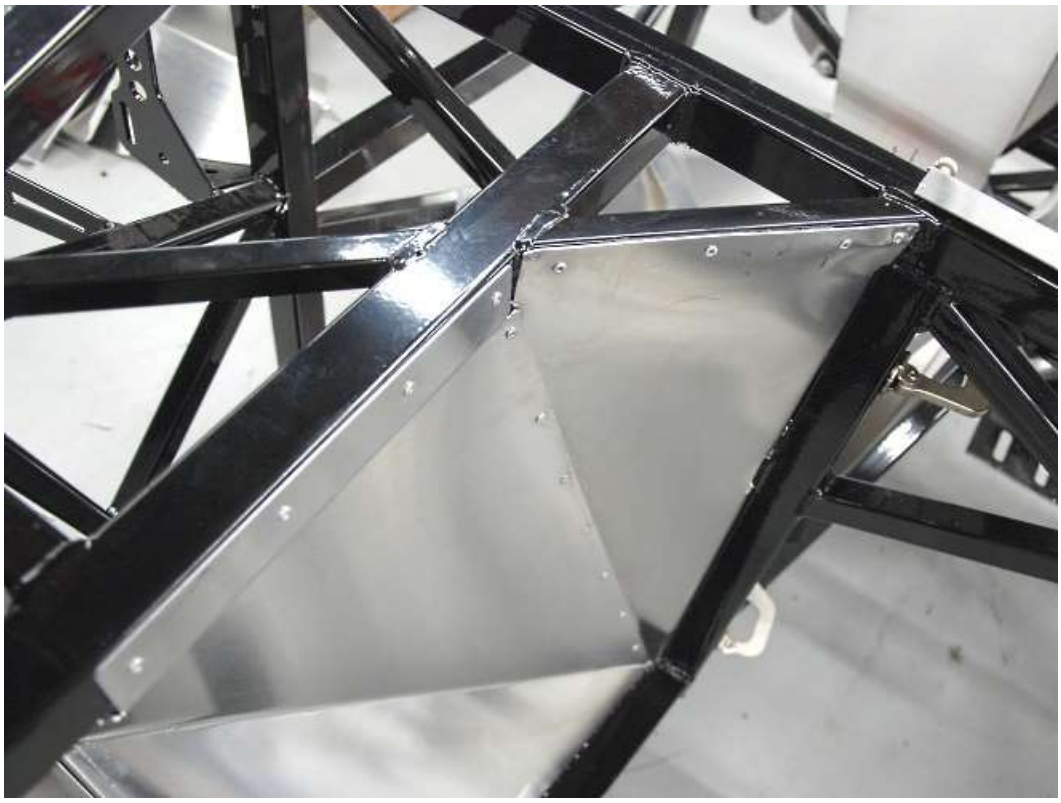

Drill and rivet the inside footbox aluminum panels. Top on the outside, bottom from the inside.

Run a bead of silicone along the inside bottom of the footbox between the aluminum and the frame.

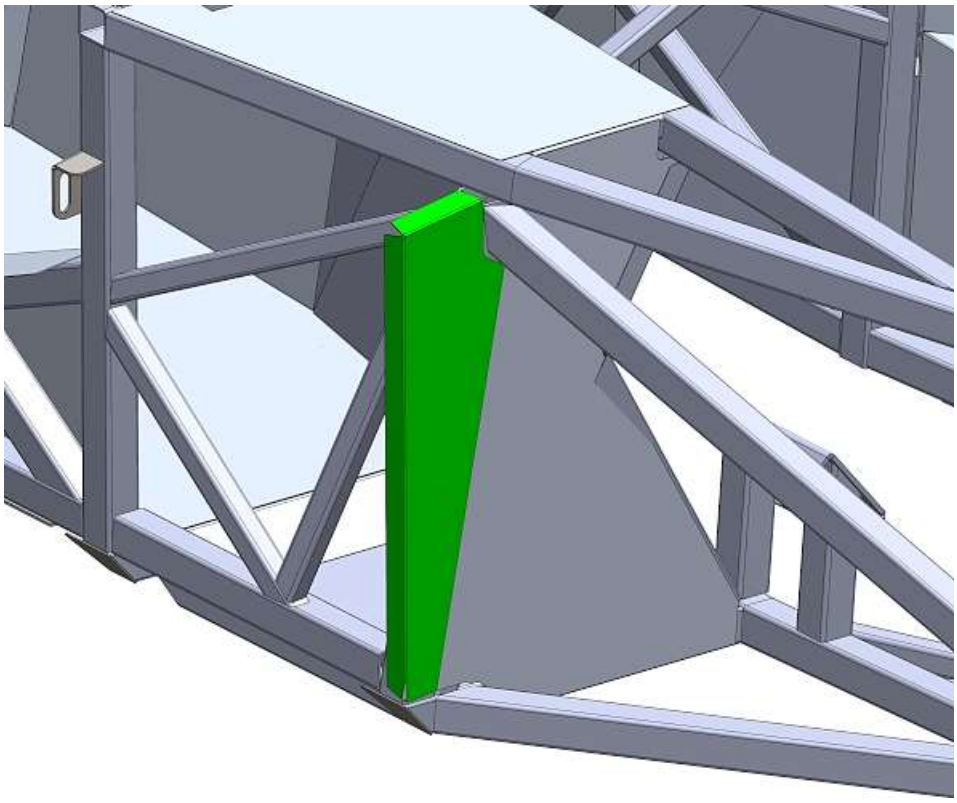

Attach the front outside panel to the chassis.

✋ If installing the Heat-A/C unit, do not drill and rivet the outside footbox panel until the A/C is installed.

Silicone, drill and rivet the outside footbox aluminum panel.

Left footbox aluminum

🚗 Secondary body fasteners (Box 4), kit mounted aluminum.

✋ Do not rivet the panels together until everything fits together in the correct location.

Apply silicone to the backside of the panels or chassis (whichever is easier) in the areas where they will make contact.

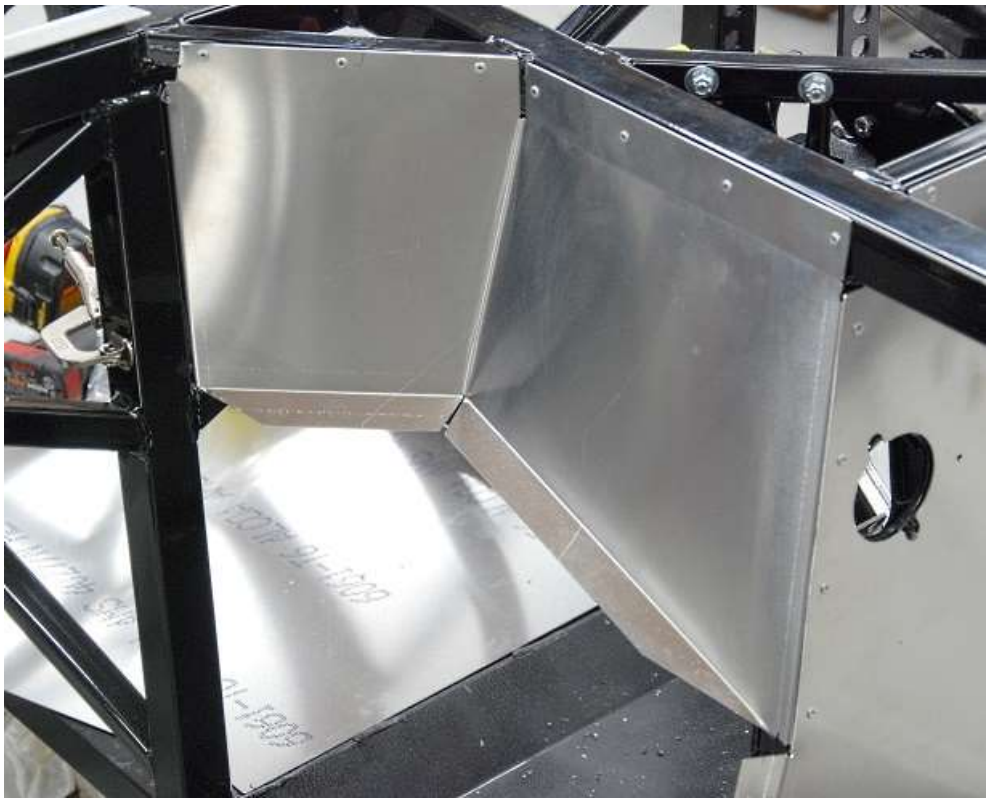

Locate and hold the left footbox inside top aluminum panel using the kit # 8 screws.

Locate and hold the left footbox inside bottom aluminum panel using the kit # 8 screws.

Mark and drill rivet holes in the aluminum into the frame tubes using a $^1/_8$" drill bit.
Rivet the panels to the frame.
Do not attach the outside panel yet.

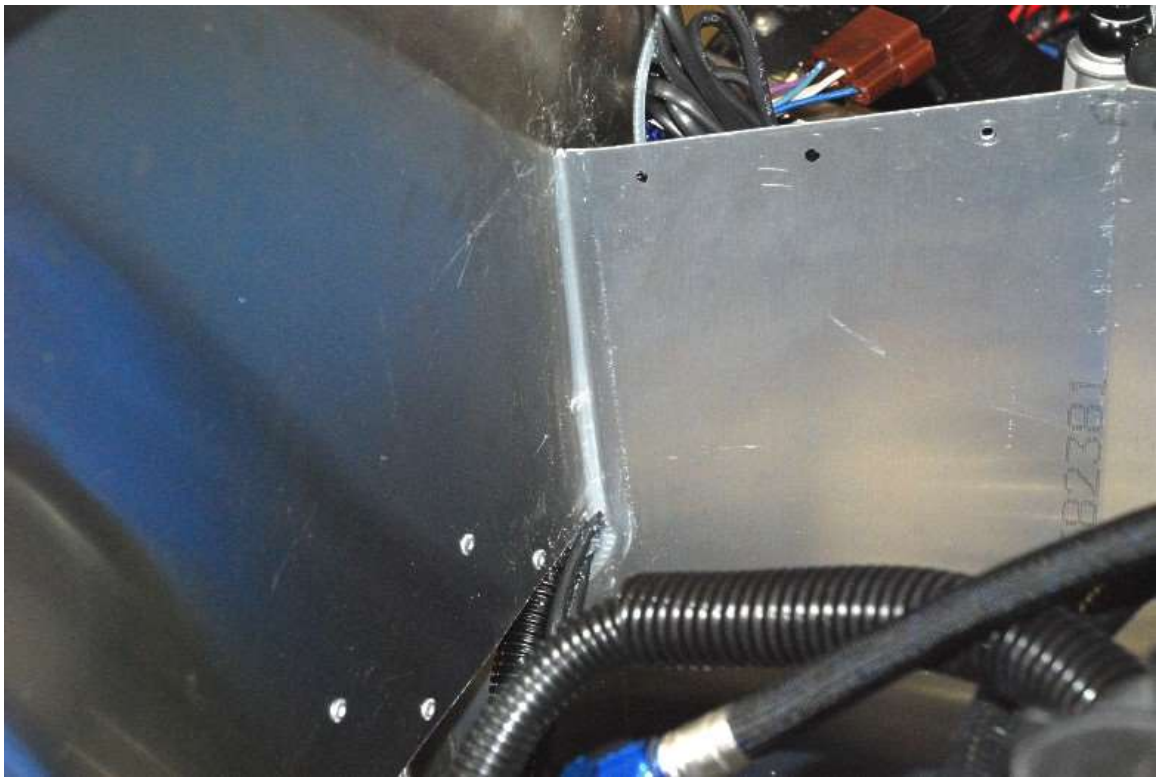

Silicone the panel to the firewall.

Cockpit lower rear wall

🚗 Packaged aluminum, mounted aluminum, Secondary body fasteners.
✋ Do one panel at a time. Be careful of the sharp aluminum edges, they can cut you.

Silicone the rear lower cockpit wall 1.50” frame tubes.

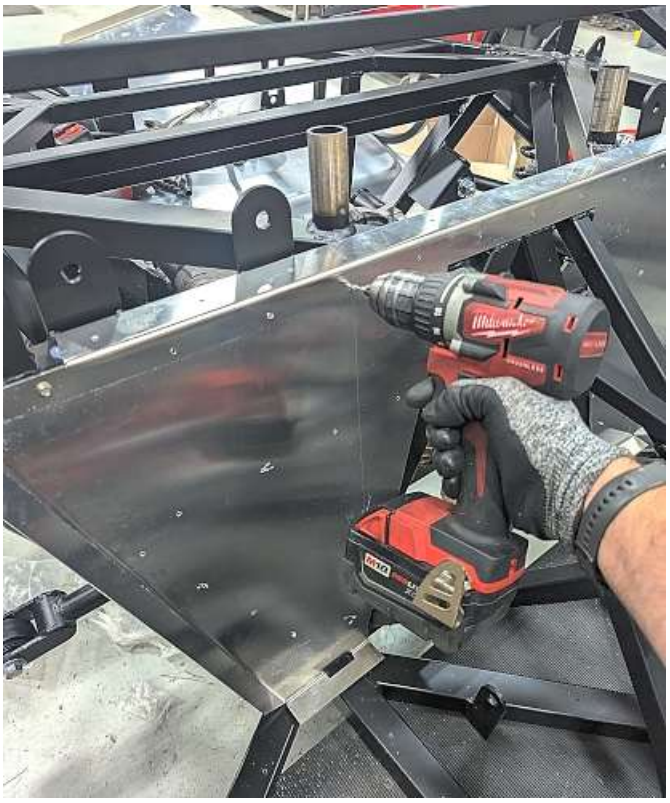

Use the #8 screws to hold the lower wall panel in place then mark, drill and rivet the cockpit rear wall to the frame.

Cockpit floors

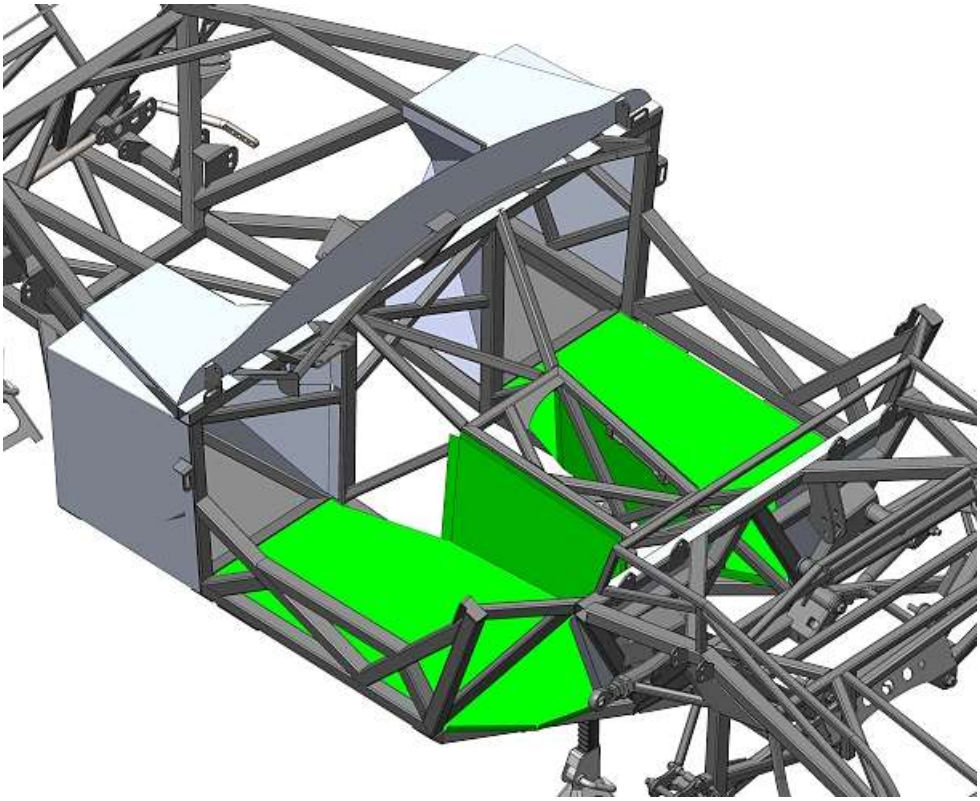

Silicone the tubes under the main floor areas.

Set the floors in place and use the #8 screws to hole the panel in place.

Mark, drill and rivet the floors in place.

Under door

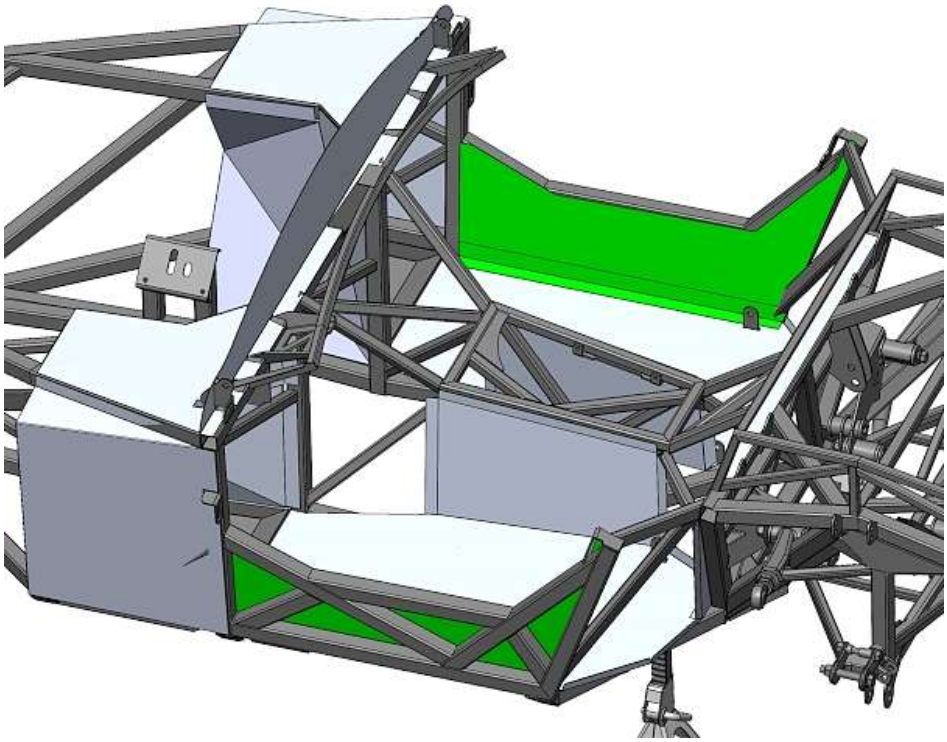

Silicone, mark, drill and rivet the under-door aluminum in place.

Cockpit rear outside corners

Lower

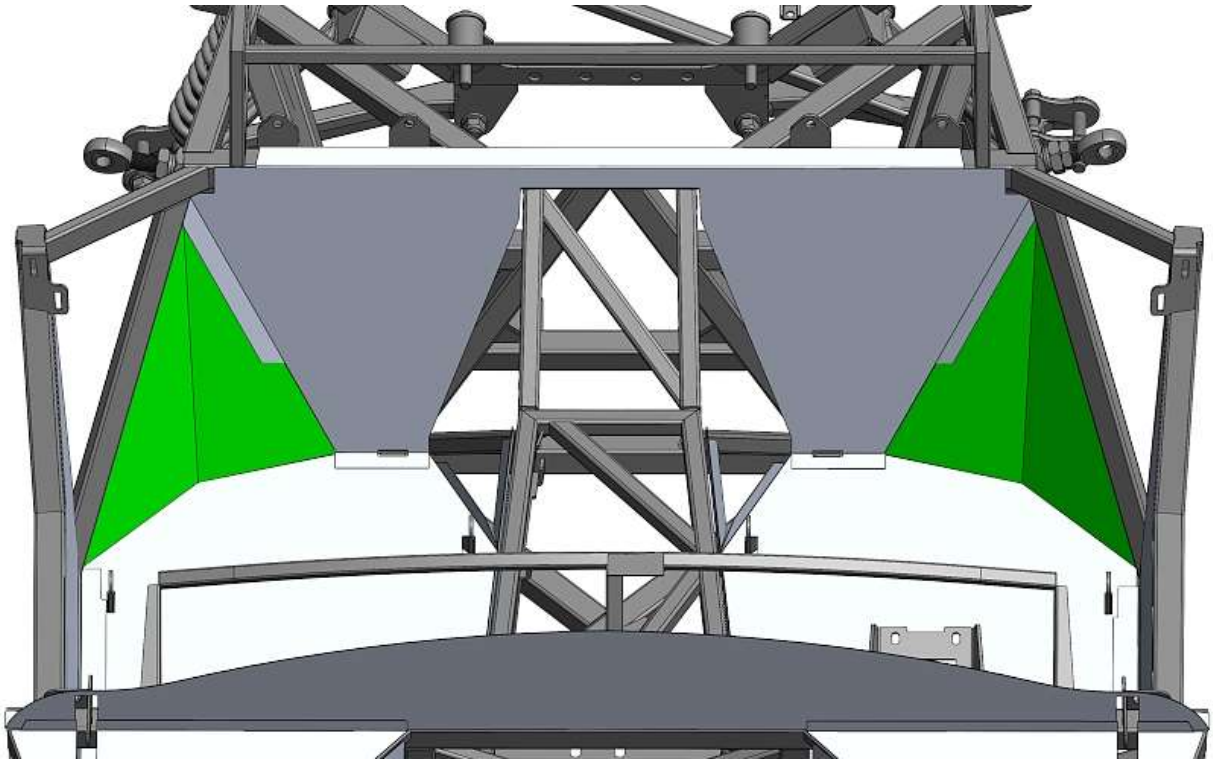

The cockpit rear outside lower corners mount on the inside of the floor and rear wall but to the outside of the angled 1.5” x ¾” tube.

Silicone the floor and rear wall flanges along with the backside of the 1.5” x ¾” tube.

Position and use the #8 screws to hold the panel in place then mark, drill and rivet the panels in place.

Upper

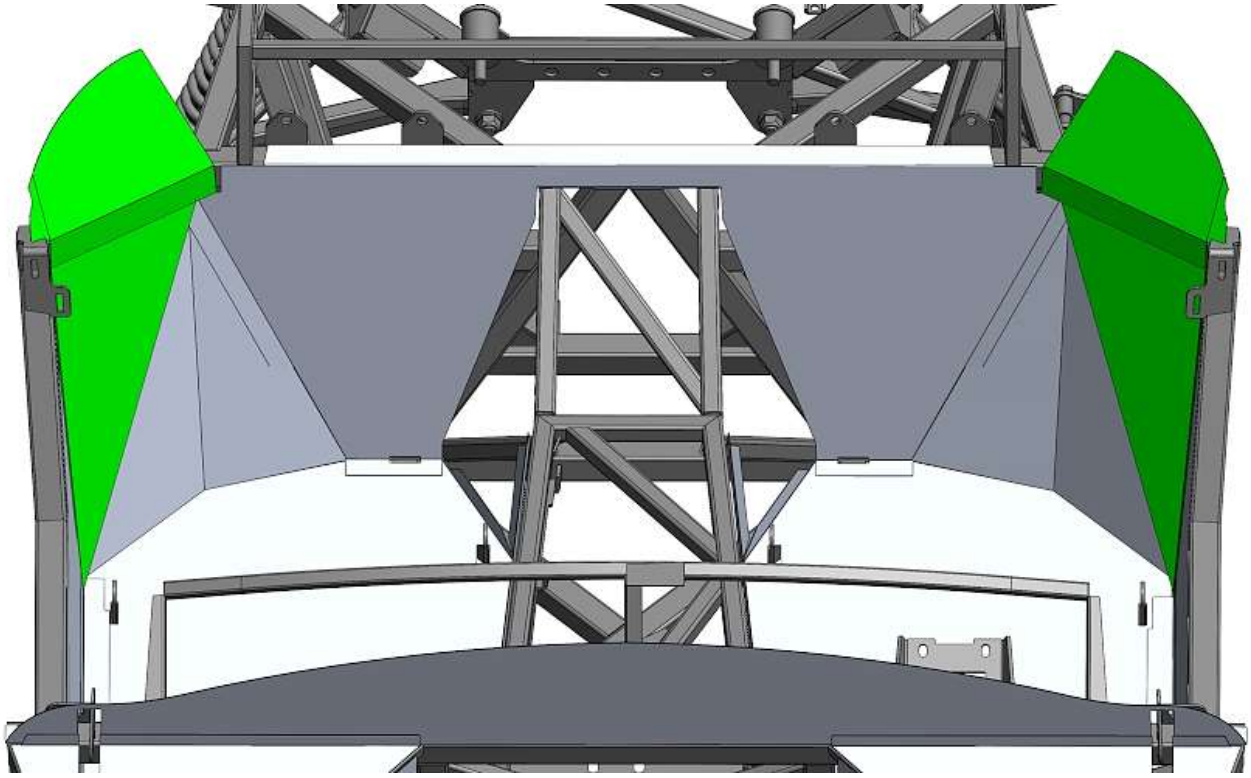

The cockpit rear outside upper corners mount on the inside of the cockpit area.

Cockpit upper rear wall

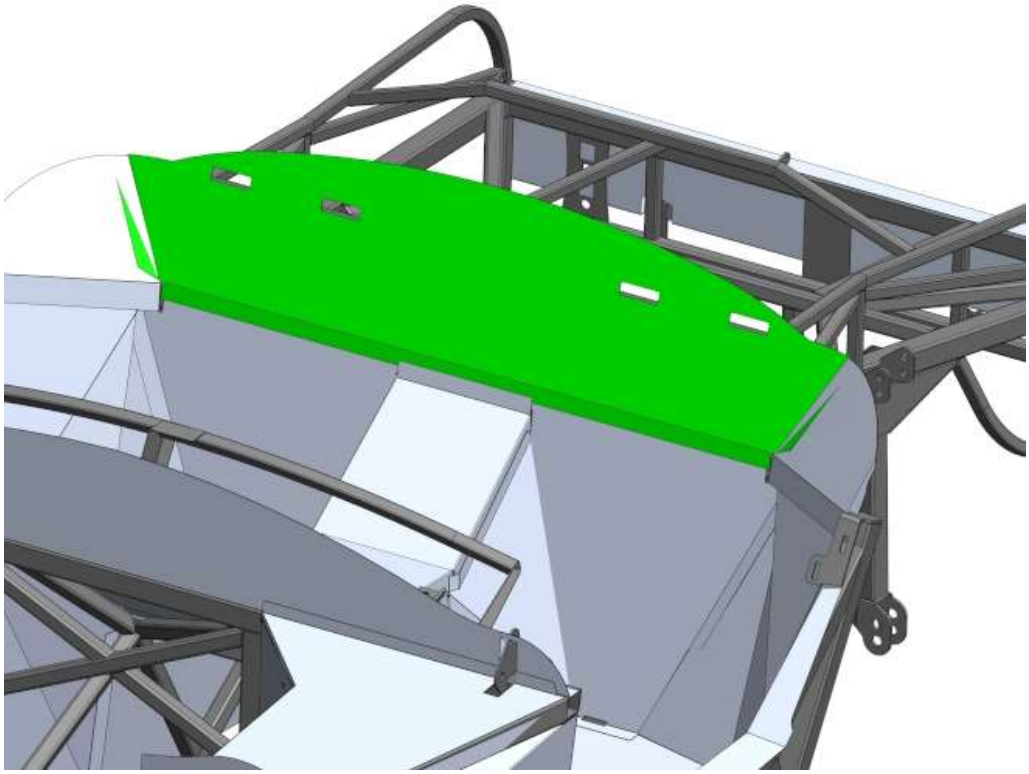

Mark and drill and install the rear upper cockpit wall. The sides attach to the rear outside upper corners.

Brake System

🛠 Tube bender, $^{3}/_{16}$", ¼", $^{7}/_{16}$", ⅝" drill bits, drill, rivet gun, marker, tape measure, razor knife, round file or sand paper, brake fluid, 5mm Hex key, $^{7}/_{16}$" wrench.

🚗 Pedal Components, insulated clip hardware, Brake line components, $^{3}/_{16}$" brake lines, Front caliper/rotor assembly

Brake reservoir

✋ There are two ways to plumb the brake fluid reservoirs. One way is to use two reservoirs, one for each master cylinder. The other way is only using one reservoir and put a "Y" in the line to go to the two reservoirs.

✋ The some of the following pictures show the older style reservoir.

Unpack the master cylinder reservoir fittings and the reservoir kit from the pedal-box assembly.

Screw in the hose barb.

Remove the cap and put the reservoir gasket in the cap.

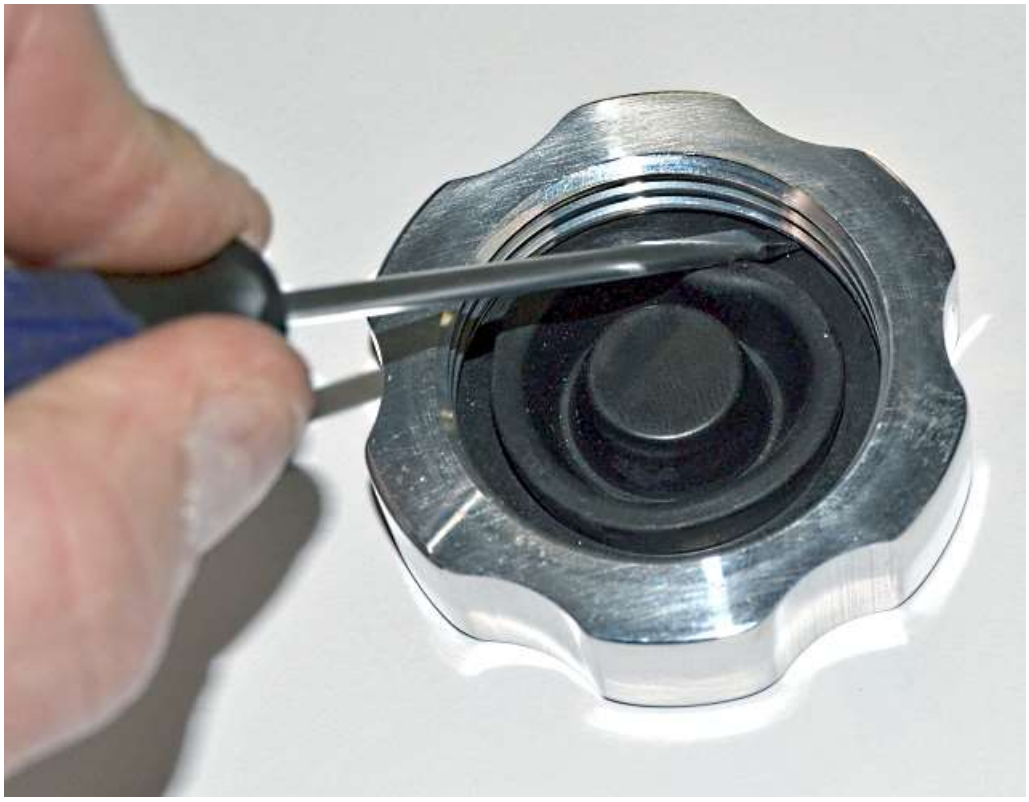

Use a small screwdriver to get the edge down under the threads.

✋ Make sure to mount the reservoir high enough so the top of the reservoir is higher than the master cylinder so the master can suck the fluid in to bleed the system.

Find a location for the brake reservoir, it can mount to the front of the footbox just inside the hood opening or behind the engine on the firewall but this would require making a bracket. Use the reservoir with cap and locate it so the reservoir cap can be removed and filled with the body on.

Using the bracket as a template drill ¼" mounting holes.
Mount the reservoir using the ¼" screws, 5mm hex key and $^{7}/_{16}$" wrench.
Attach the reservoir to the mounting bracket ¼" screw, 5mm hex key and $^{7}/_{16}$" wrench.
If drilling a hole for the reservoir hose, drill a ⅝" hole. Take extra time with a file and round all the edges making sure there are no burrs left or sharp spots.

The best way to pass the hose through the wall of the footbox is using the included bulkhead hose fitting.

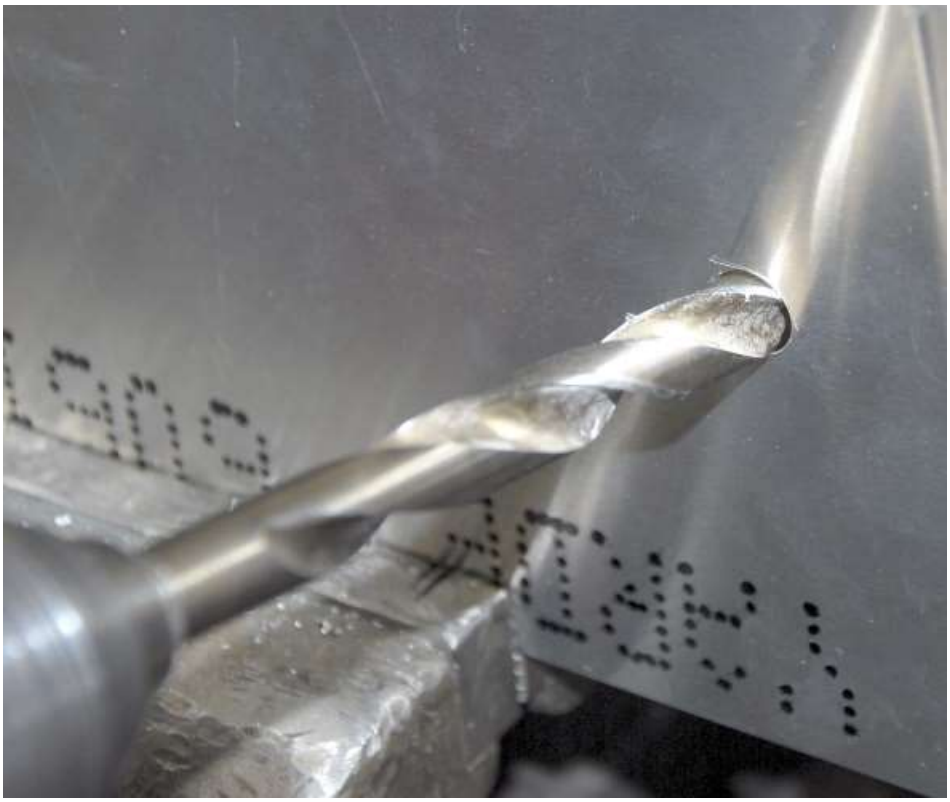

Decide the routing of your reservoir to master cylinder hose and drill a ½” hole through the aluminum for the bulkhead fitting. The fitting is slightly larger than ½” so wiggle the ½” bit around to oversize it.

Insert the bulkhead fitting and spin the nut on the backside of the panel. Tighten the fitting using $^{7}/_{16}$" and $^{11}/_{16}$" wrenches.

✋ Make sure to put the hose clamps on the hose before pushing onto the barb, it is hard to get the hose off the barb after.

Route the hose from the reservoir to the bulkhead fitting, push a hose clamp onto the hose then onto the barb. Tighten using a 7mm socket and ratchet.

Route the line from the reservoir the top of the brake pedal area then cut the hose.

Connect and split the hose to the two master cylinders using the Y provided. Make sure that the line cannot get in the way of moving parts, especially the brake pedal!

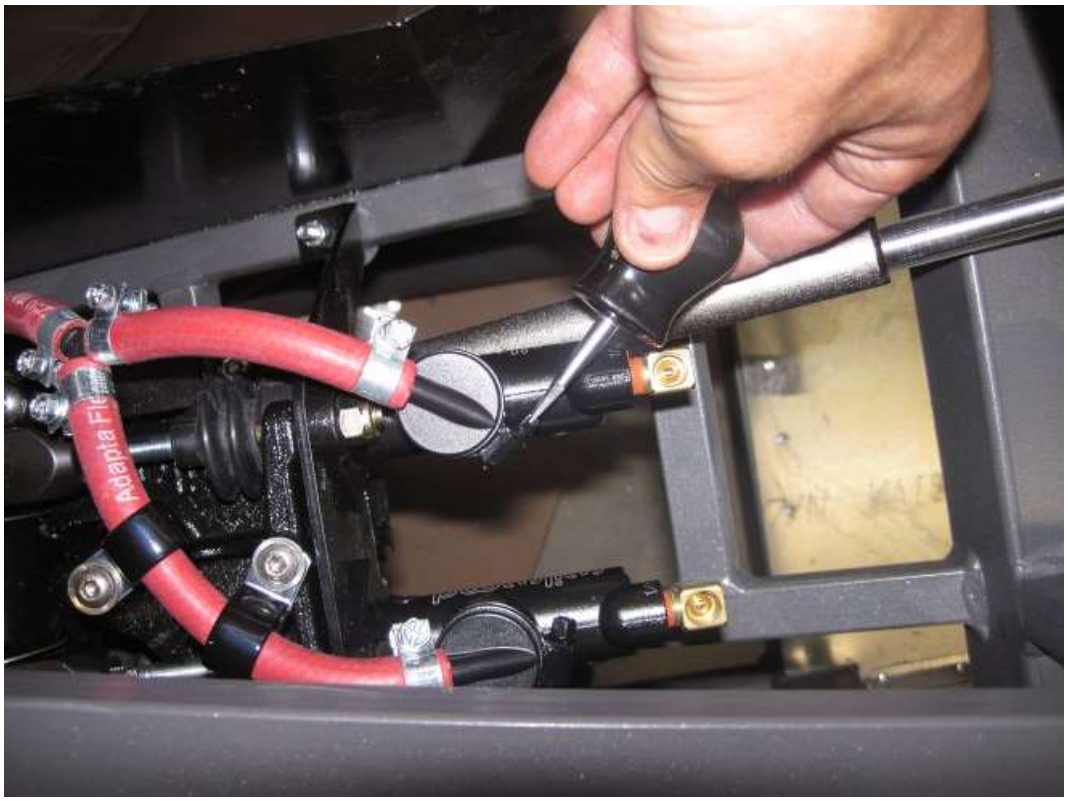

Attach the master cylinder hose adapter to the master cylinder and use insulated clips from the secondary body fasteners box or zip ties to hold the lines in place.

Brake Booster (Optional)

🚘 Remote Brake Booster parts (Box 33)
🛠 $^{7}/_{16}$" socket, ratchet, 8mm, 13mm wrenches, $^{5}/_{32}$" hex key.

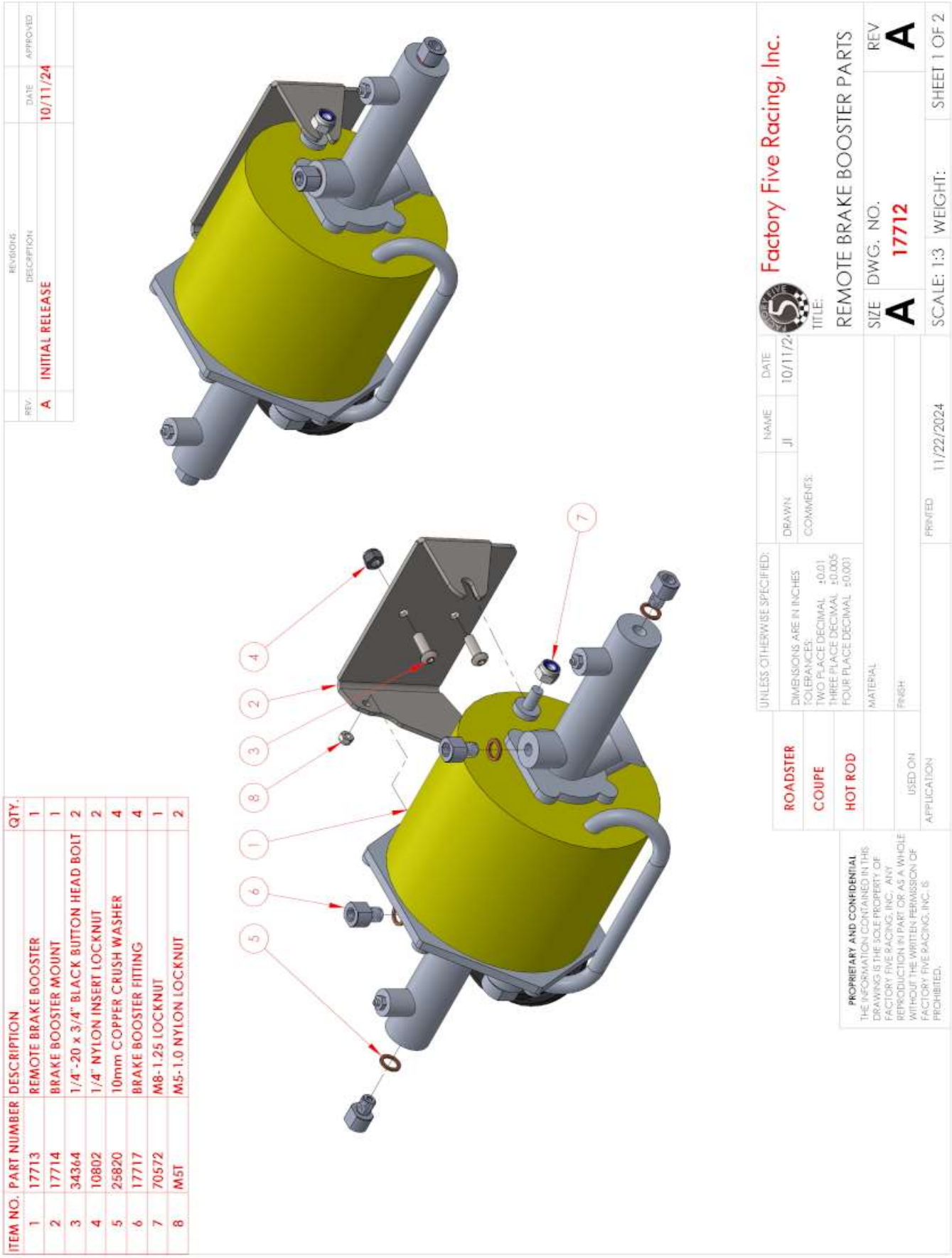

Locate the remote brake booster parts.

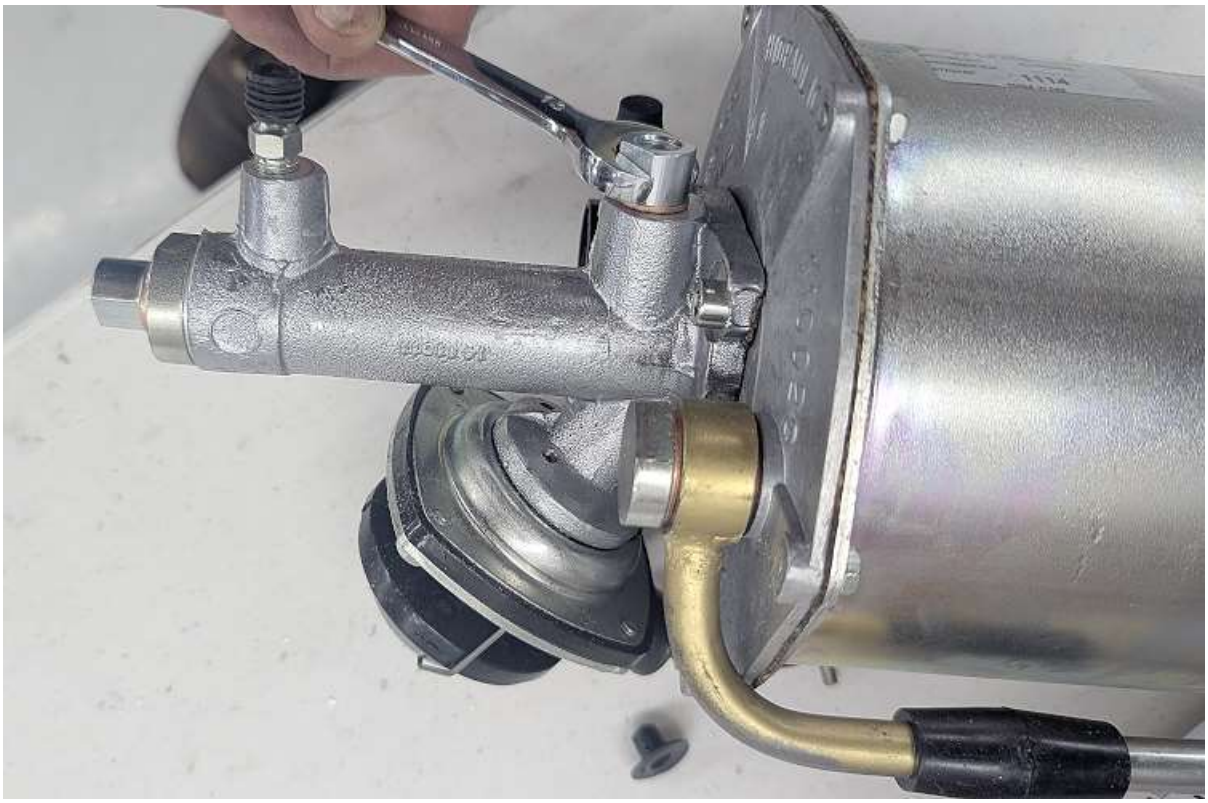

Attach the booster fittings to the booster using the copper crush washers.

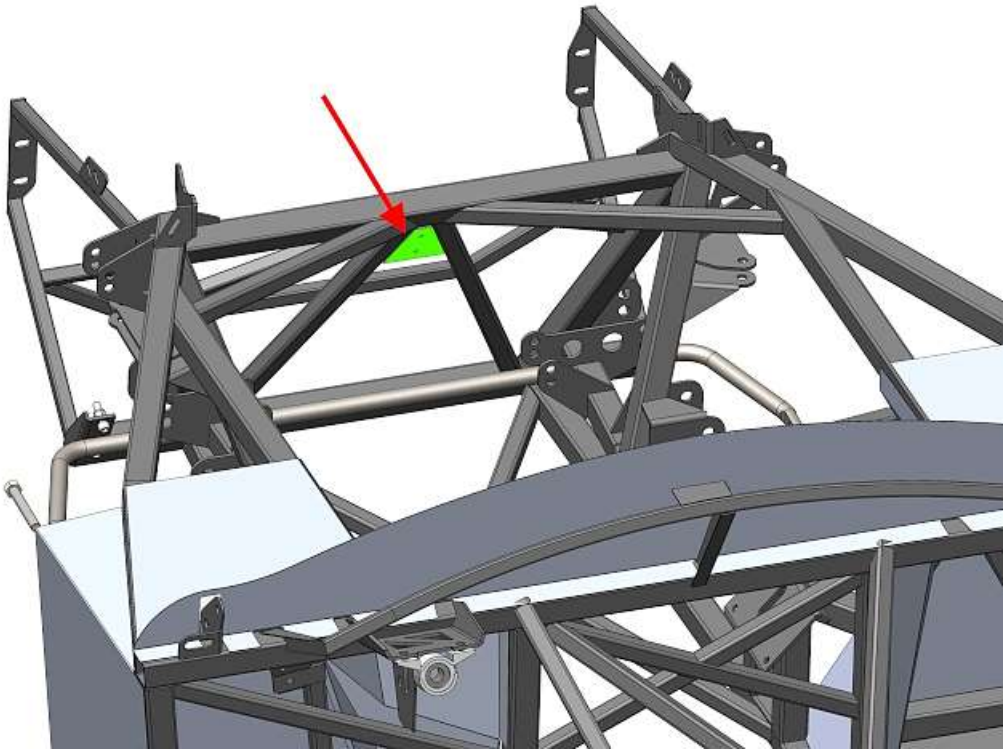

Locate the front frame mounting location for the booster.

Attach the booster mount to the frame using the ¼” button head screws, $^{5}/_{16}$” wrench and $^{5}/_{32}$” hex key. Note the orientation of the bracket.

Insert the left side small studs through the bracket and attach the brake booster using the small metric locknuts and 8mm wrench.

Attach the right side using the larger locknut in the slot and a 13mm wrench.

Mounted booster.

Attach the 8” brake line to the left side end fitting on the booster. This will get shaped when the front flexible brake line mount is mounted.

Front flexible brake lines

- $^{7}/_{16}$”, ½”, ¾” wrenches, $^{3}/_{16}$” drill bit, drill, rivet tool, $^{9}/_{16}$” socket, torque wrench.
- Front brakes (Box 18), brake line components (Box 1).

Unpack the hardware from the front brake assembly. The stainless laser cut mounts with the circles on are for FFR or Wilwood brake braided lines.

If necessary, attach the brake line adapter to the flexible AN brake line. Tighten using $^{7}/_{16}$" and ¾" wrenches.

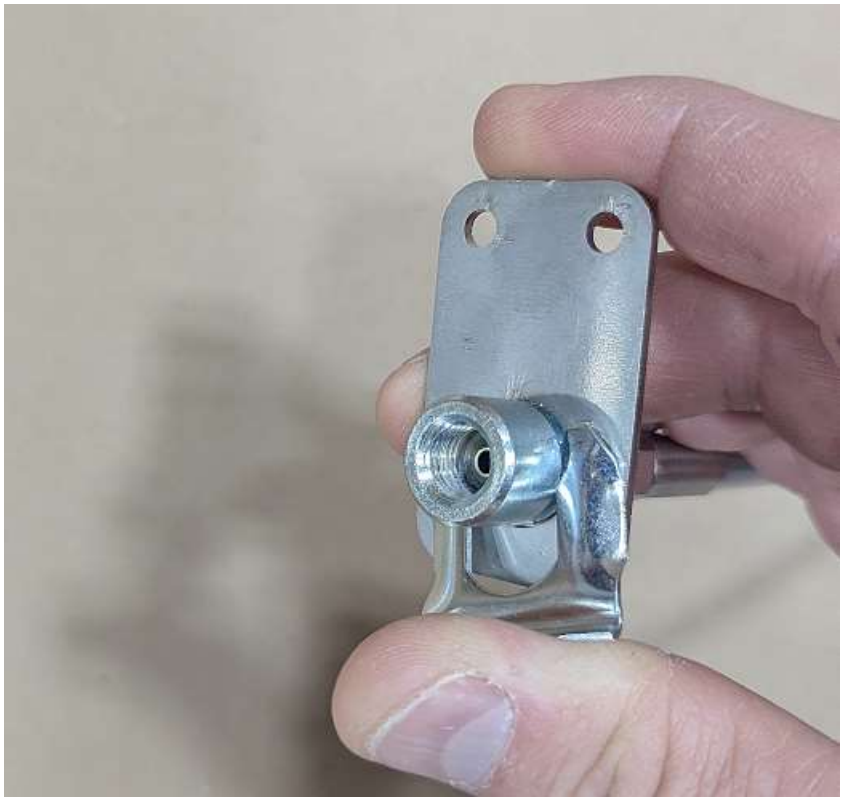

Push the brake line adapter through the laser cut bracket from the outside in and install the clip that holds it in place.

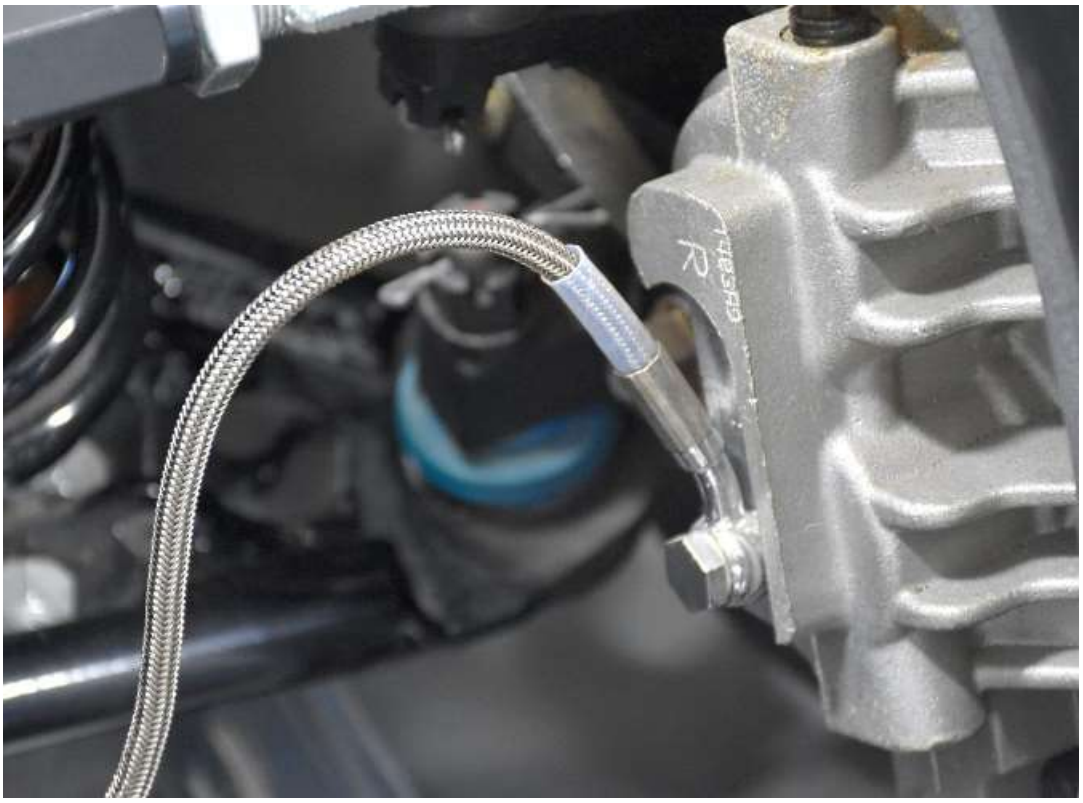

Attach the front flex line to the caliper making sure there is a crush-washer on either side of the fitting. Hand tight these for now.

Repeat these steps for both front lines.

Clamp the stainless bracket to the 1.50” tube above the front lower control arm rear mount. Make sure that when the steering is turned all the way in both directions that the brake line is not tight. If necessary, move the location of the frame bracket.

If the Brake booster is being used, bend the 8” brake line on the booster and connect it to the side fitting on the brake line “T”. Make sure that when the steering is turned all the way in both directions that the brake line is not tight.

Drill and rivet the bracket in place using two $^{3}/_{16}$” rivets.

Hard Brake lines

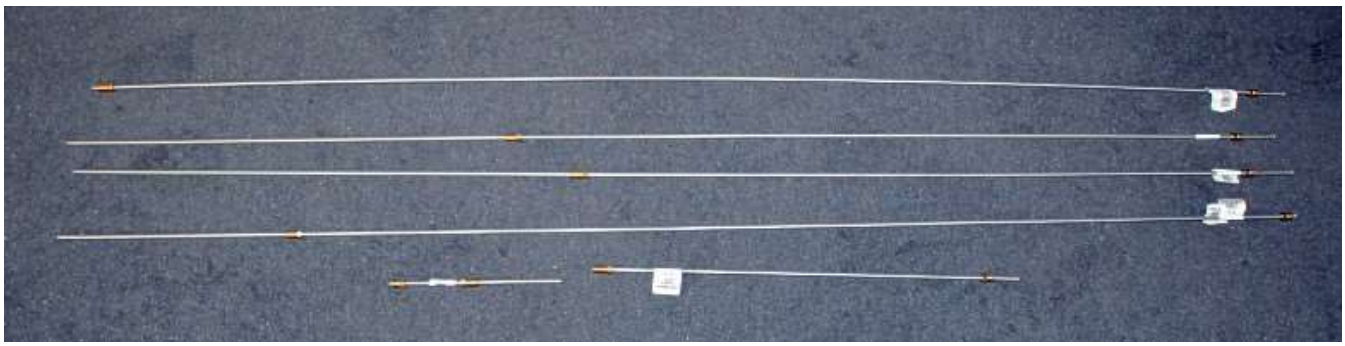

Lay out the various lengths of brake line so you can see what you have to work with. Like the fuel lines, there are many ways to run these lines but you must be very careful to keep them protected from moving parts, heat, or being too close to the bottom of the car.

- Which side you run down may depend on where you are hooking up to your fuel rail, carburetor, or pressure regulator. We usually run the fuel lines on the right side of the car and the brake lines on the left side of the car.
- Routing of the brake lines depends if the Brake booster is being used. If the booster is being used both front and rear need to get routed forward to the Booster.
- **Never** run brake lines below the bottom of the frame. If the frame contacts the ground for some reason it could damage the lines.

Front left

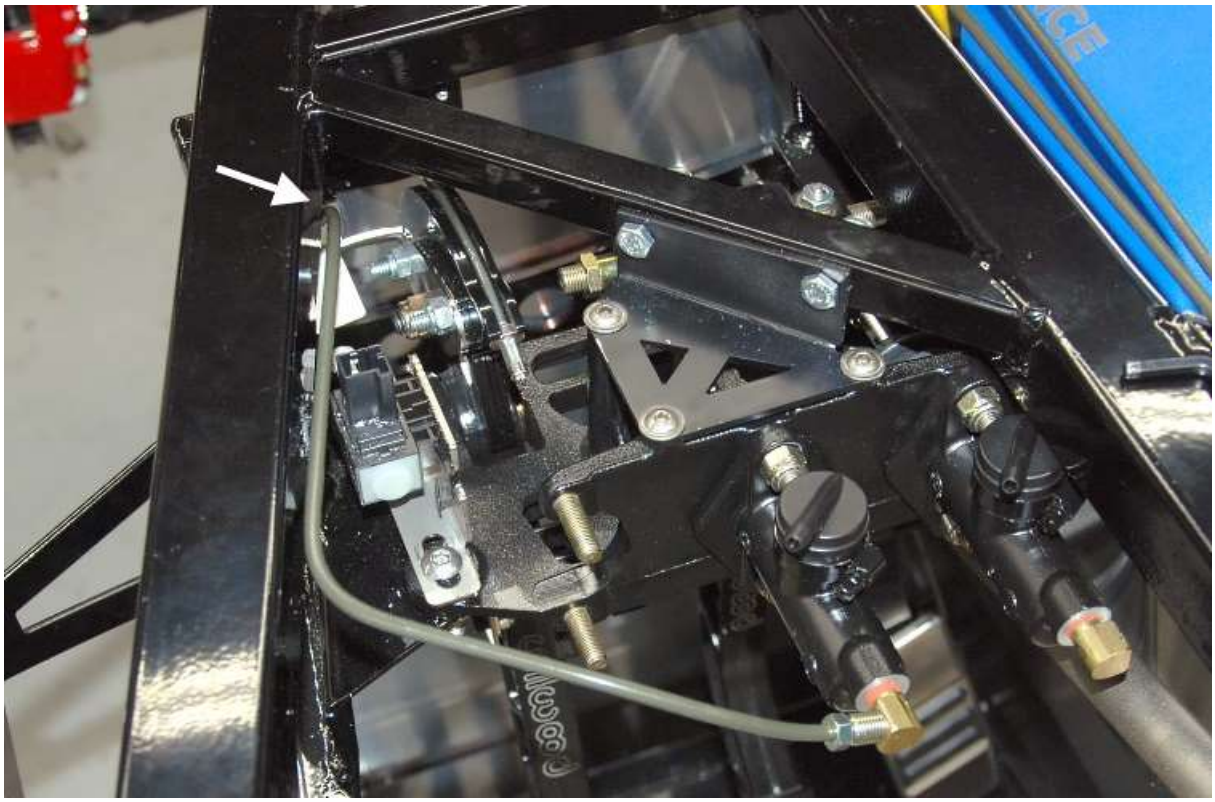

Run one of the 60” brake lines from the left (¾”) master cylinder to the 1.50” tube to the left of the pedalbox and out the front of the pedalbox below the tube as shown.

Brake booster line routing

Run the front and rear brake lines forward under the top 1.50” tube. Run the lines across under the 1” tube to the booster.

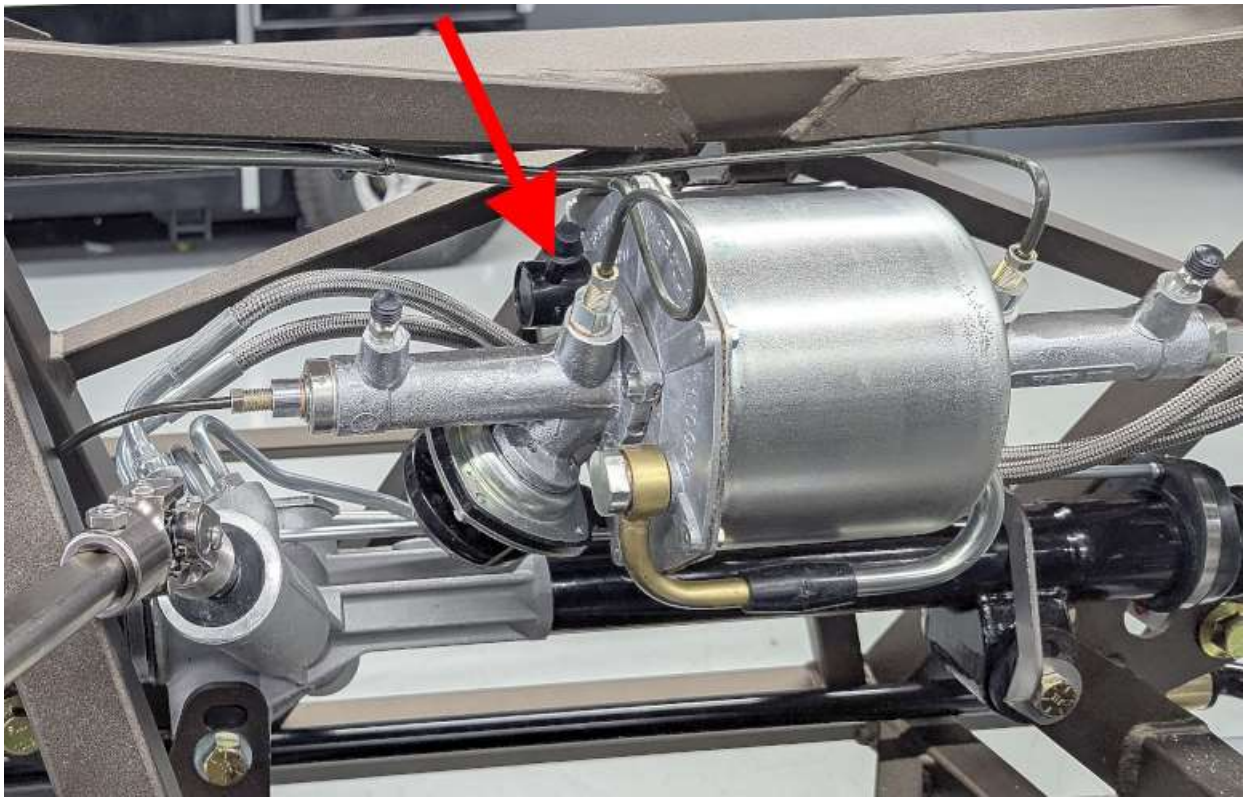

Attach the front brake line to the left side of the booster next to the large part of the booster.

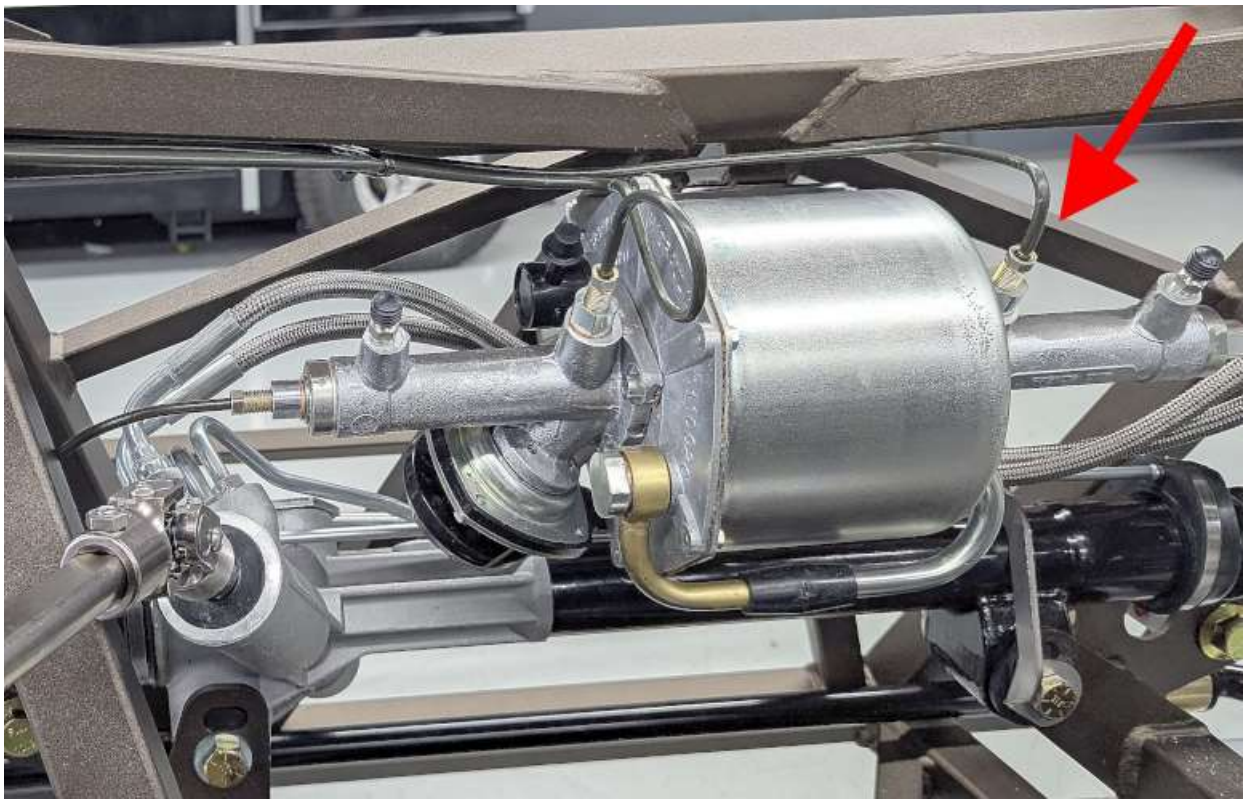

Attach the rear brake line to the right side of the booster next to the large part of the booster.

Standard brake line routing

Keep the brake line as far away from the headers as possible or make a heat shield to protect them so the brake fluid does not overheat.

Run the brake line down the 1.50” tube to the bottom frame tube then up the back side of the angled front suspension tube to the left flexible brake line mount. Attach the brake line to the frame using ¼” insulated clips and $^{3}/_{16}$” rivets.

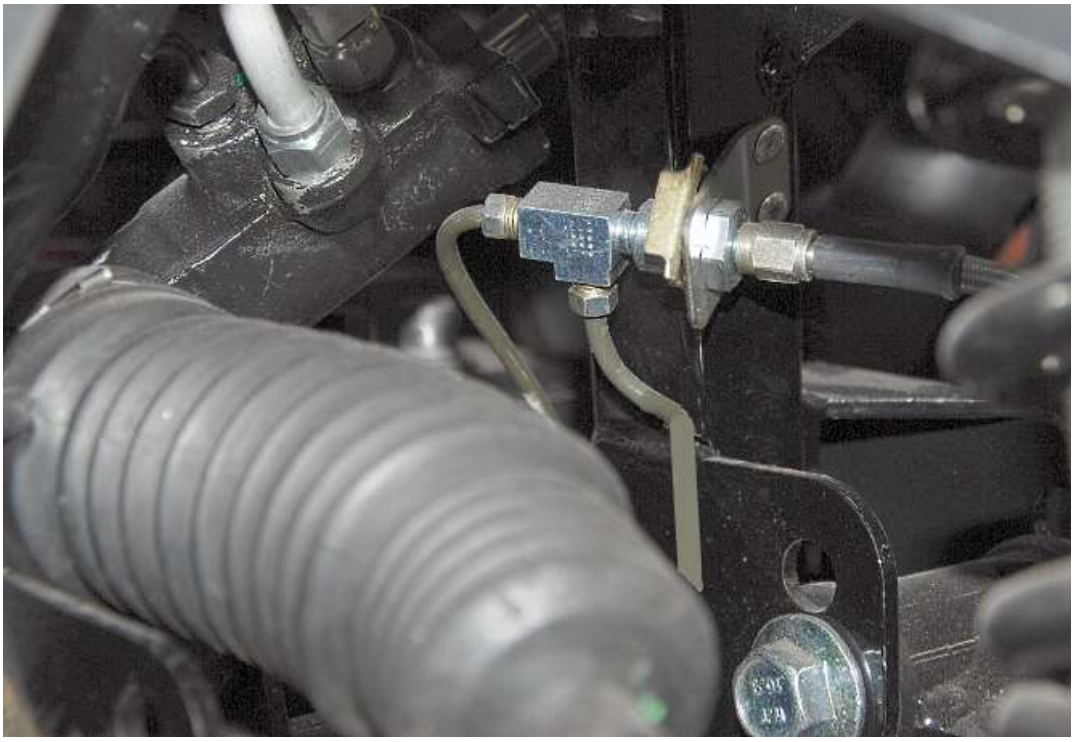

Connect the brake line “T” adapter to the end of the flexible brake line using a ¾” and ½” wrenches then run the hard brake line from the master cylinder into the end of the adapter.

Front right

Attach the laser cut bracket to the chassis above the front lower control arm rear mount like the left side. Drill and rivet these in place using two $^{3}/_{16}$" rivets.

From the "T" fitting run two 20" brake line down the 1.50" tube, across the frame just in front of the engine over to the right side of the frame.

Connect the brake line to the flexible brake line adapter.

Torque the front flexible brake line to caliper banjo bolts to **29 lb-ft** with a torque wrench and $^{9}/_{16}$" socket.
Tighten all brake line nuts.
Use silicone to seal anywhere you pass into the passenger compartment.

Rear brake line (Brake Booster)

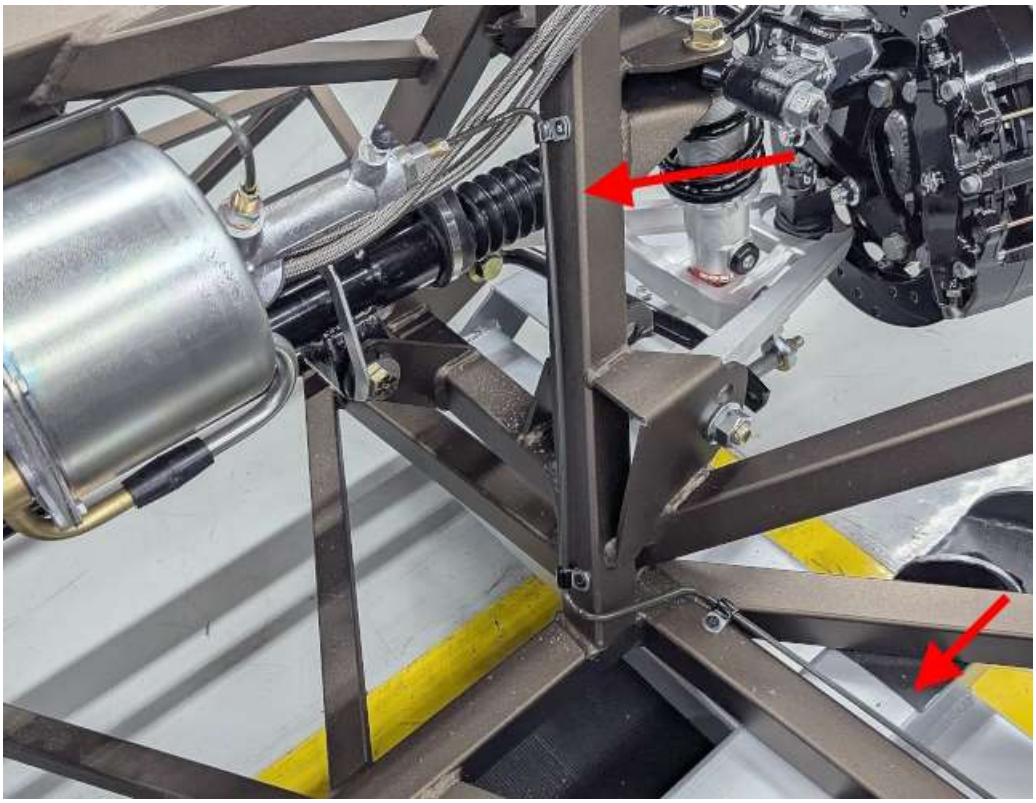

From the end of the Booster run a 60” brake line down the right side of the chassis.

Rear brake line standard routing

From the right (Rear brakes) master cylinder run a 60” brake line towards the center of the car then to the rear of the inside footbox panel.

At the back of the inside footbox, run down the 1” transmission tunnel tubes to the bottom 1.50” tube then to the back of the transmission tunnel.

At this point your routing will depend on your rear brakes. 87-93 Mustang solid axles have a single flex line that runs to the middle of the axle then out to the calipers. Newer axles and the FFR rear brakes run the flexible brake lines direct from the chassis to the caliper (the IRS is done like this, there is an extra length of line and a T to allow similar routing to the front.)

Solid axle

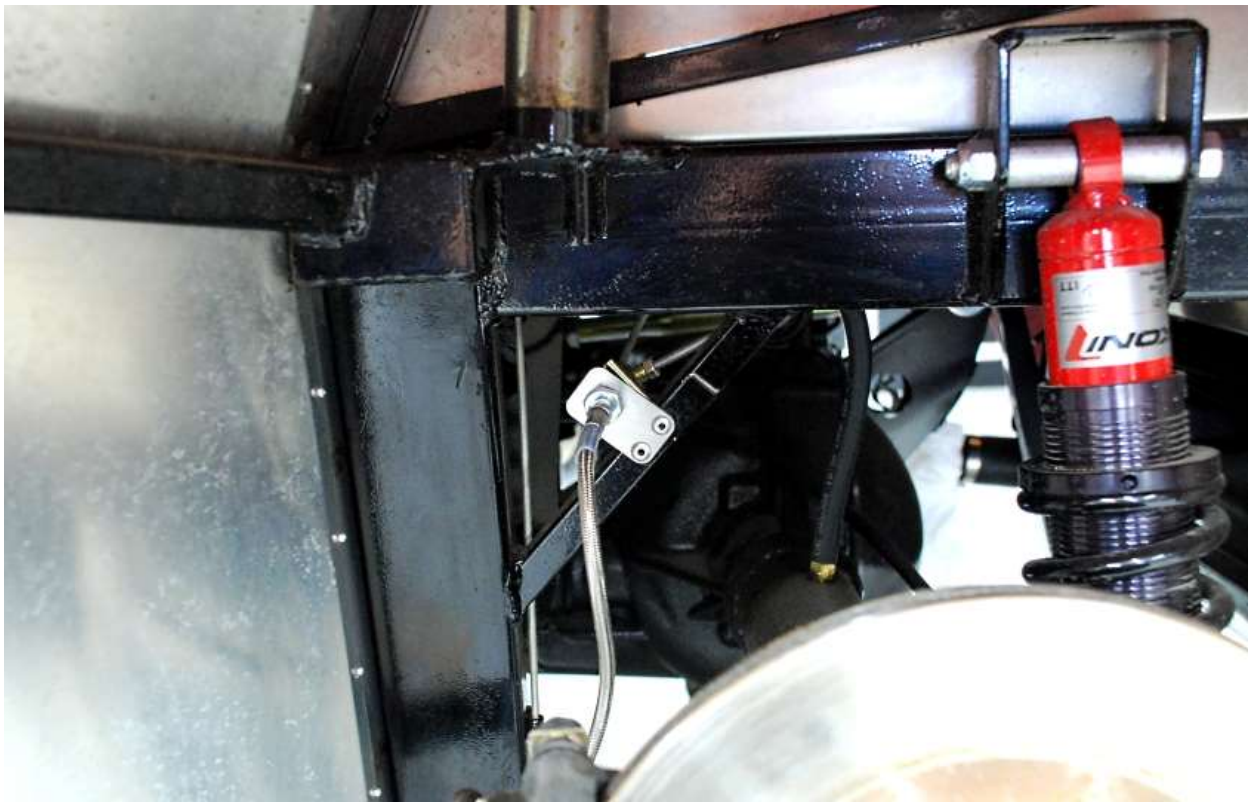

Using the FFR rear brakes, we attached the flexible brake line mount to the driver side diagonal ¾" tube with the brake line clip.

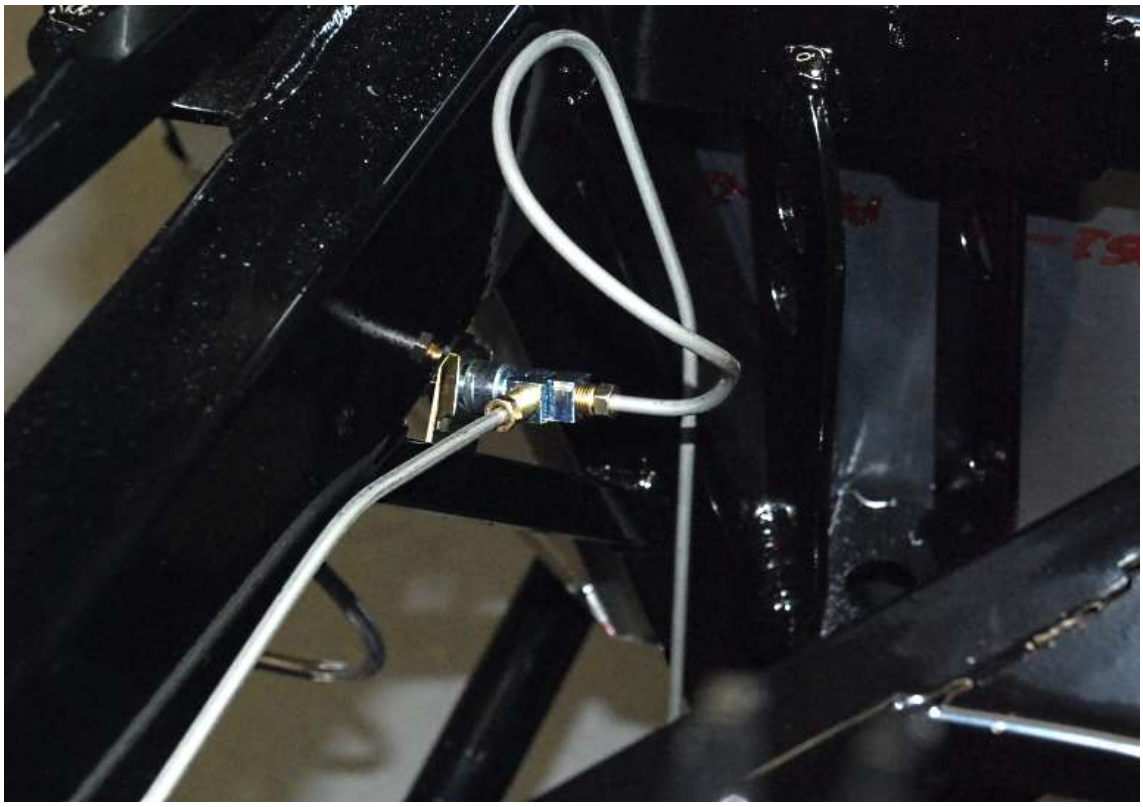

Attach the “T” adapter to the flexible brake line and route the hard brake line coming from the front to the “T.”

Run a 60” brake line from the “T” up the ¾” tube to the front fuel tank mount tubes and over to the passenger side ¾” tube. An alternative to running it this way would be to run it across the backside of the 1.50” tube.

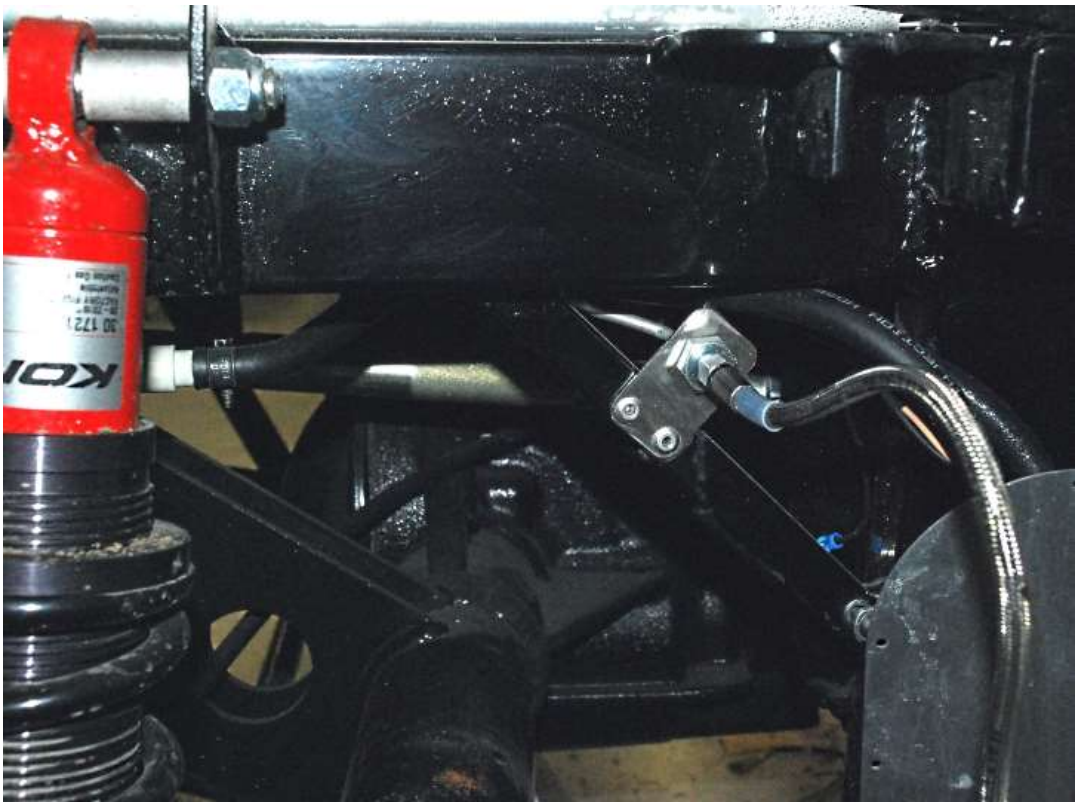

Attach the passenger side flexible brake line mount to the ¾” tube and attach the flexible brake line to the bracket with the brake line clip.

Attach the hard brake line to the flexible brake line.

✋ Make sure that your flex lines will not interfere with anything in the suspension, wheels during travel or turning full lock to lock.

Tighten the banjo bolts on the calipers

Run the brake line over to the left side 1” square tube.

The flexible brake line mount can be on the 1” square tube but the mount may need to be bent so the T clears on the inside.

For the right side run a 60” line from the end of the left side connector then forward to the 2”x 3” tube, across and back to the 1” square tube and flexible brake line mount.

Banjo bolt torque specs

Front Brake hose to caliper Banjo bolt – **(39Nm) 29 lb-ft**
Rear brake caliper hose to caliper Banjo bolt – **(43Nm) 32 lb-ft**

When your system is finished being plumbed, go back and check all the fittings for tightness.

Brake fluid filling/bleeding

Brake fluid - DOT 3

Adjust the pedal height temporarily high to ensure maximize travel in the master cylinders. The pedal should be topping out and bottoming out only when the master cylinder is at the extreme ends of its travel. Ensure that the pedal is not contacting any frame section or other installed part and limiting its travel in either direction.
Fill the brake fluid reservoir with brake fluid.
Unscrew the brake lines from the master cylinders.
Bench bleed the master cylinders in the frame. This can be done in the car with a short piece of brake line run from the master cylinder back into the reservoir.
Reattach the brake lines to the master cylinders.
Gravity bleed the system to get a head start on filling up the lines with fluid - Crack the four bleeder screws and leave the reservoir lid loosely screwed in to allow for easier fluid movement. Depending on reservoir height and line routing you may not get fluid all the way to the calipers.
Work your way around the car getting fluid to each caliper before trying for a final bleed, always making sure the reservoir never runs dry.
Once you have some pedal feel the master cylinders will not travel the same distance as one another. This can lead to difficulty bleeding the side which is not compressing as much. To solve this bleed one caliper from the front and one from the rear simultaneously through several pedal cycles. The bleeders do not need to be cracked open at the same exact moment but they both need to remain open until the pedal is fully at the bottom of its stroke.

Air can get trapped inside the caliper even if none is coming out of the cracked bleeder. To get the air out it helps to give the caliper a few light taps with a soft mallet to dislodge the bubble and get it up to the bleeder nipple.

For the final bleeding, bleed the right side of the car (right rear and right front).
With the brakes bled you can set the bias and adjust the pedal heights, use the Wilwood adjustment procedure to set the pushrod lengths. Both the bias and pushrod adjustment can affect pedal feel so your pedal may not feel correct until this adjustment is made.

Pedal adjustment

Adjust the clutch pedal stop and master cylinder threaded shafts so that the pedal height is comfortable. In general, the clutch pedal is about 2” higher than the brake pedal and the brake pedal is higher than the accelerator pedal so that when the brakes are pressed the brake pedal is even with the accelerator pedal.

Chassis wiring harness (Complete kit)

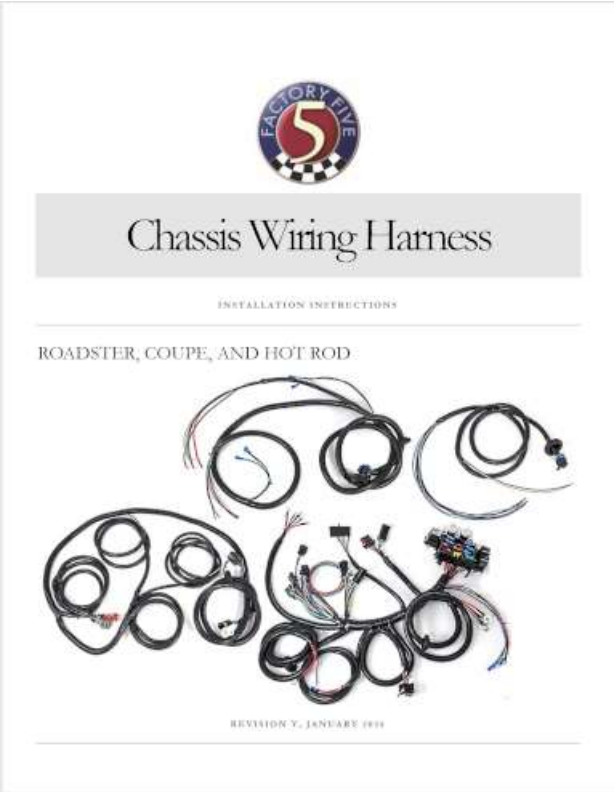

The chassis wiring harness routing and instruction are included with the harness.

Turn Signal Wiring (complete kit)

Plug the Turn signal switch into the chassis harness plug near the fuse panel.

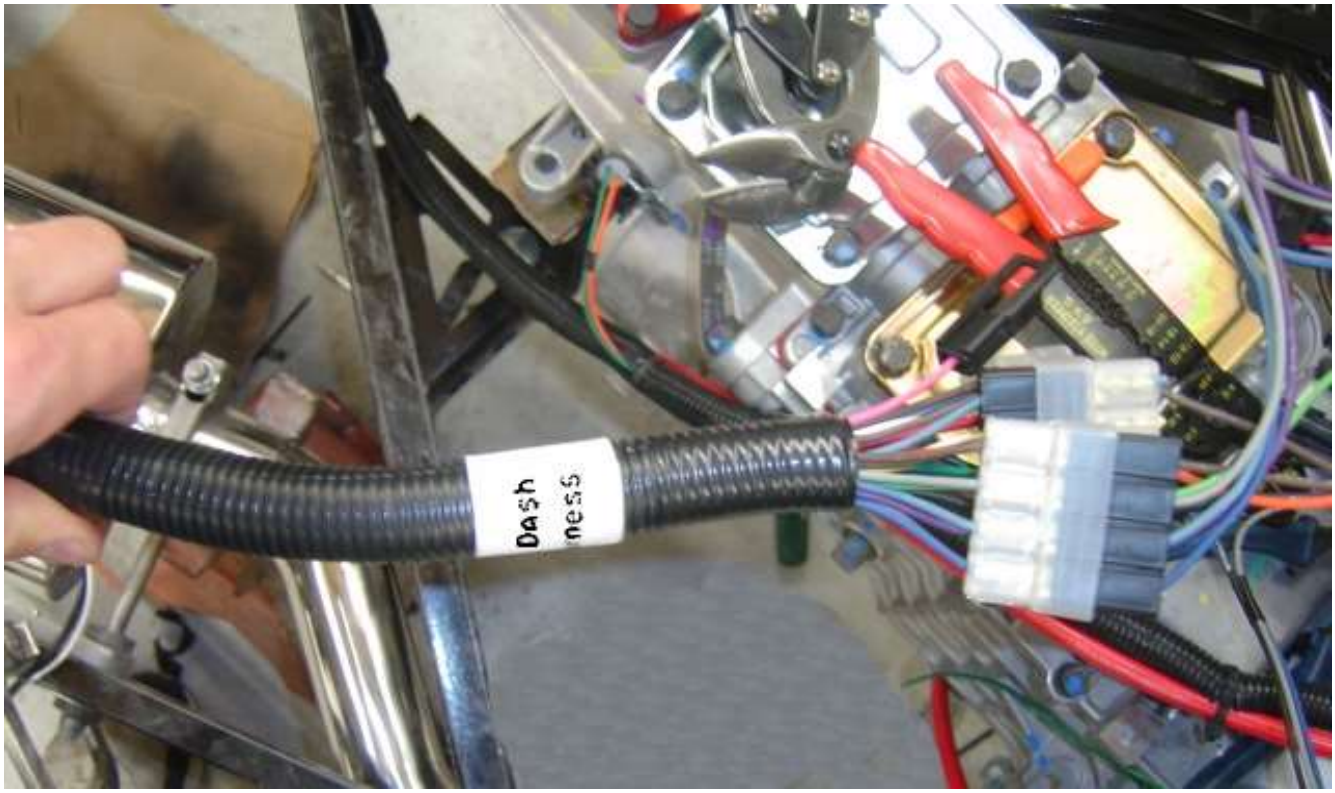

Locate the dash harness section of the chassis harness.

Cut the (pink) hazard wire back and tape the end so that it will not ground out and pop the brake fuse.

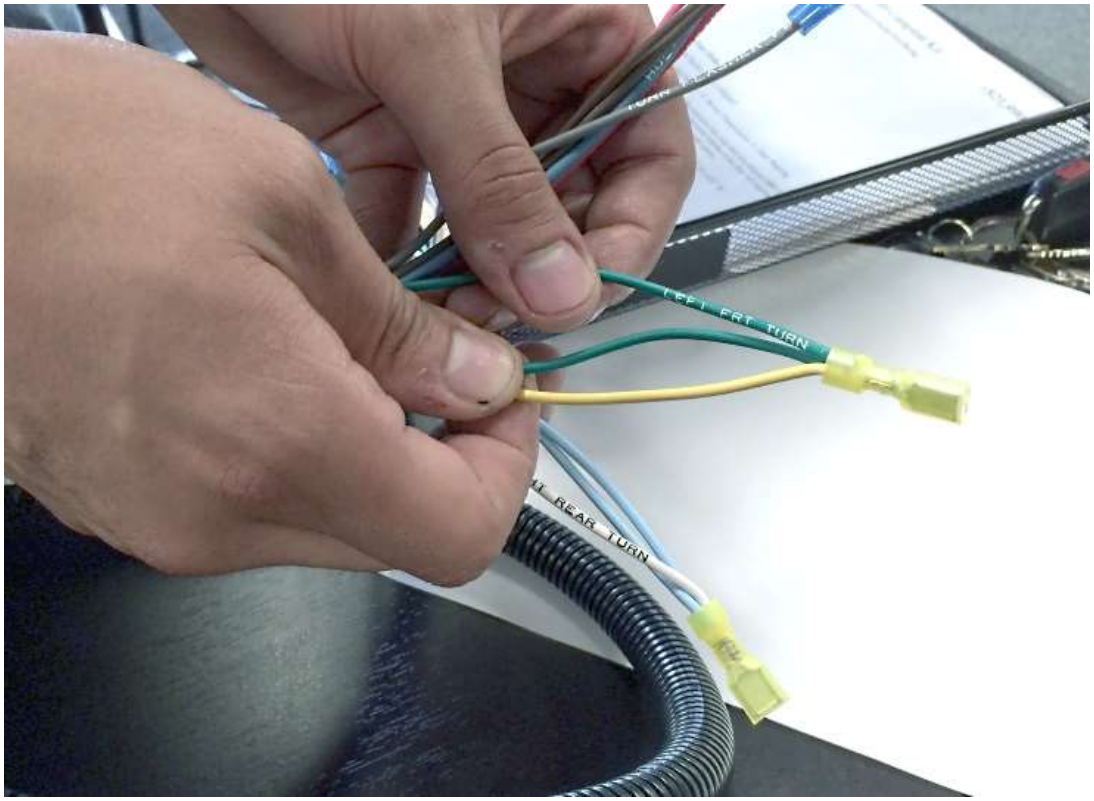

Cut the yellow and white rear turn signal light wires off the turn signal connectors that are for the dash turn signal switch so that the turn signal lights do not back feed and light the front turn signals when the brakes are pressed.

Connect the ignition switch to the harness using the chassis harness instructions.

Trunk Aluminum

🛠 $^{1}/_{8}$" drill bit, silicone, rivet gun, caulk gun, $^{9}/_{16}$" wrench, $^{5}/_{16}$" hex key.
🚘 Mounted Aluminum, Packaged Aluminum, secondary body fasteners

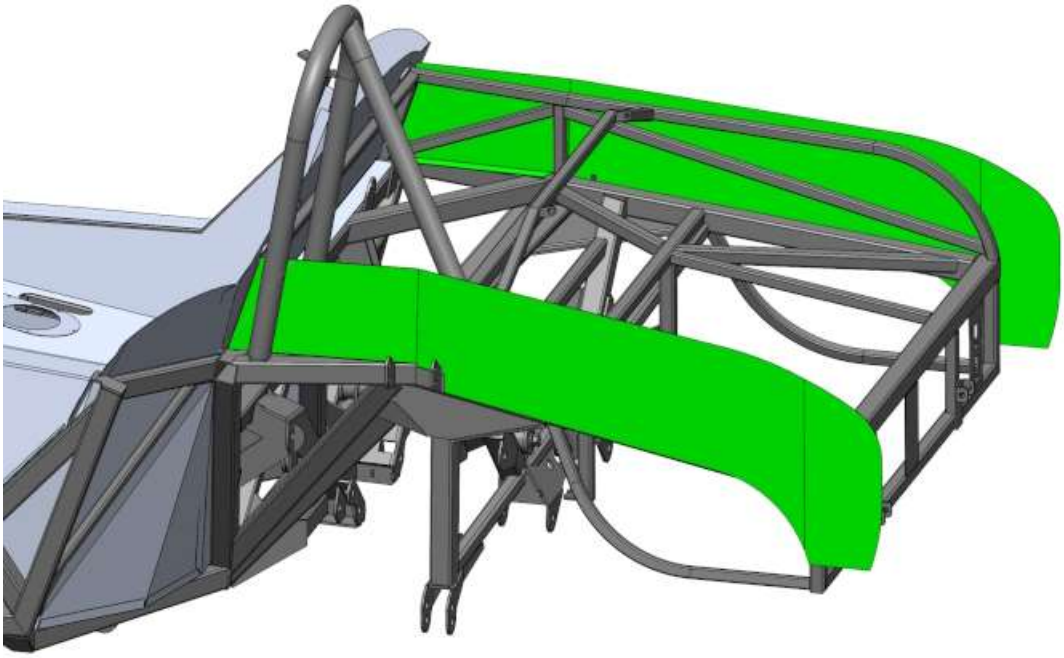

Silicone, install and rivet in the trunk side panels.

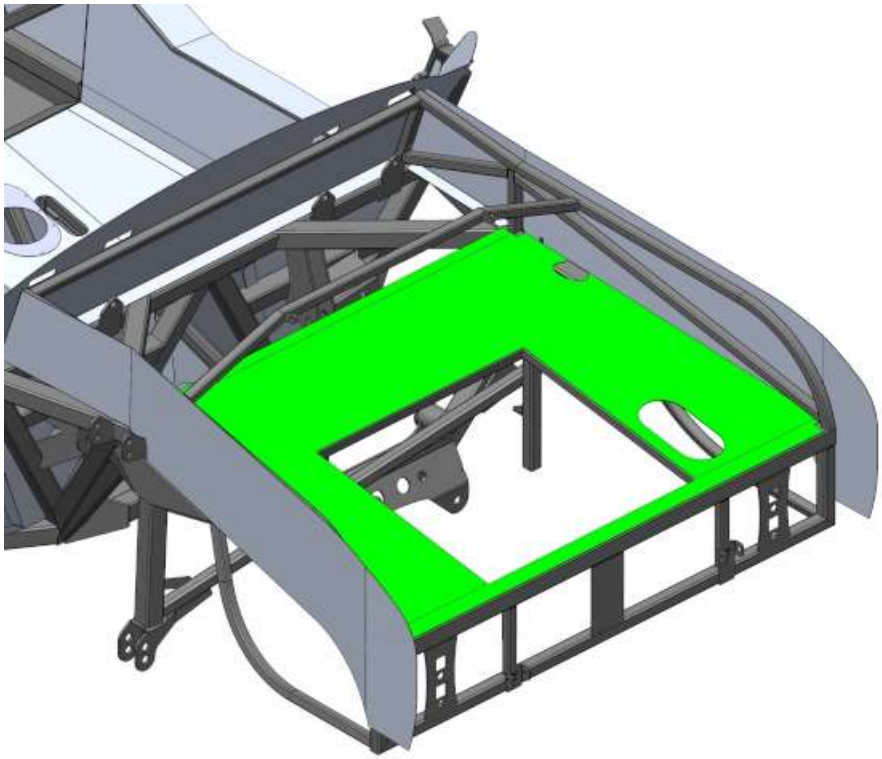

Silicone, install and rivet the lower trunk floor. Do not rivet along the rear tube yet.

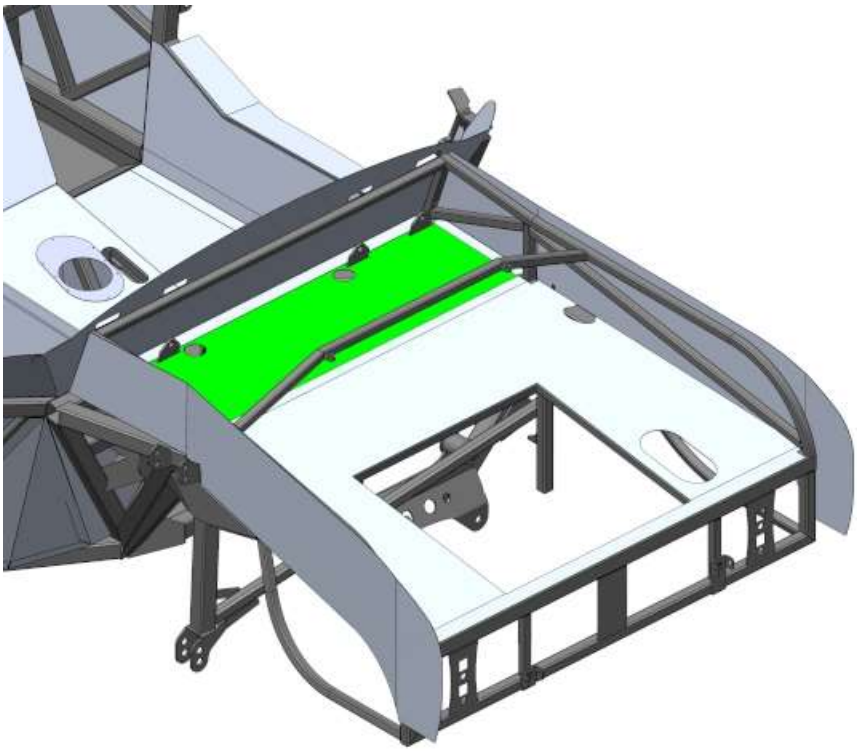

Silicone, install and rivet the front trunk floor.

Insert the U-nuts from the top through the rectangular hole into the rear quick jack frame mount holes.

Place a jack under the right side of the fuel tank to hold it in place then remove the right rear gas tank strap bolt.

Silicone, install and rivet the lower trunk floor.

Re-install the gas tank strap bolt and tighten.

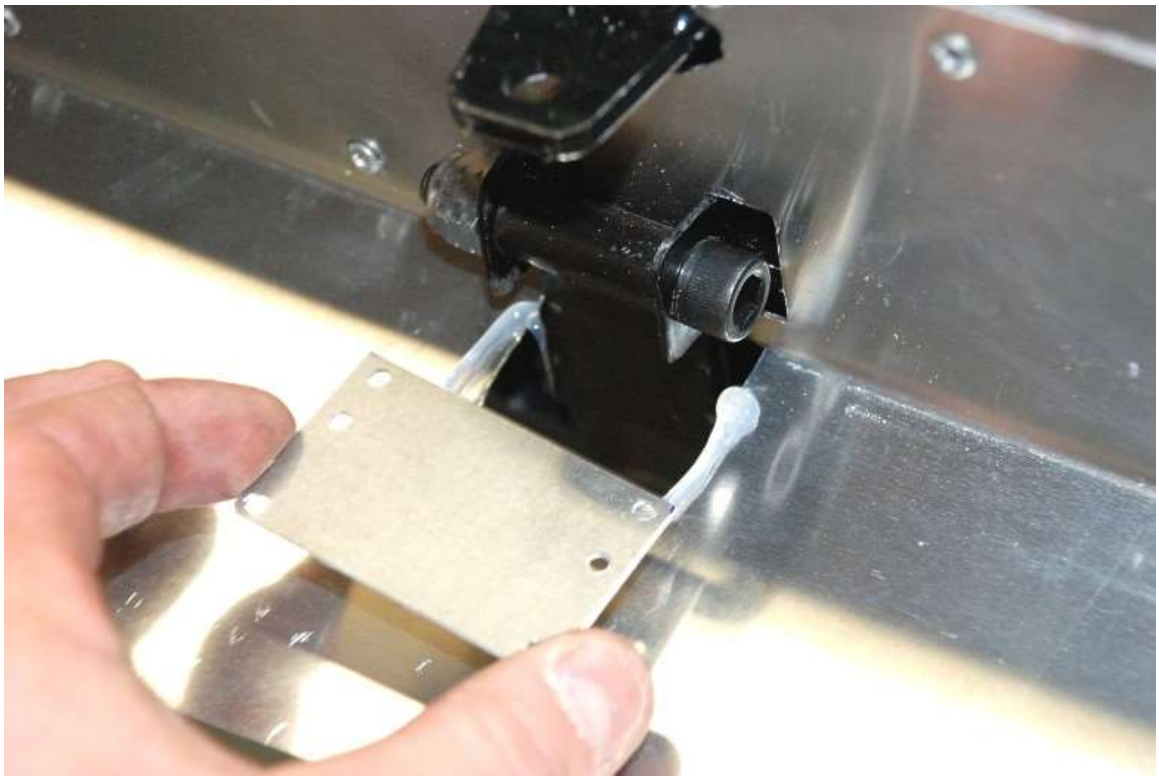

Silicone and rivet the fuel tank strap patch panel from the packaged aluminum assembly.

✋ Do not install the recessed trunk area yet.

Engine Prep

🛠 Engine hoist, chain, ¾”, $^{15}/_{16}$” sockets, ratchet, extension
🚘 Engine, Polyurethane engine/transmission mount kit

- The easiest method to install the drivetrain is with the engine and transmission already bolted together and lowered in as a unit. Also remove anything that will make your job easier (shifter assembly, headers, power steering pump, etc.…).
- If using a 4.6L or Coyote engine, a shallow oil pan is required. See www.factoryfiveparts.com/instructions for Coyote instructions.

Unpack the engine mounts and attach to the engine. Do not forget to attach the engine ground strap to a right-side engine mount bolt.

87-95 Oil Filter Relocator

- ⅞" wrench, razor knife, Teflon tape, chassis grease, ⅜" hex key
- Oil filter relocating kit, oil, oil filter
- This is only required if running a 302 and Mustang shorty headers.

Place the O-ring in the adapter groove.

✋ If the O-ring will not seat properly, put it in the freezer for 15 minutes and use a small amount of chassis grease to hold it in place while spinning on the adapter. Tighten ½ turn after solid resistance is felt. The outlets for the hoses should be facing **towards** the front of the engine.

Install the oil filter relocate base plate on the engine.
Install the block off plugs (with a ⅜" hex key) in the adapter holes not being used. Use the Teflon tape on the threads of the plugs as you tighten them. Wrap the Teflon tape so it stretches when you attach the plug into the threaded socket. **Max torque** for the fittings on the relocate kit is **28 lb.-ft**.

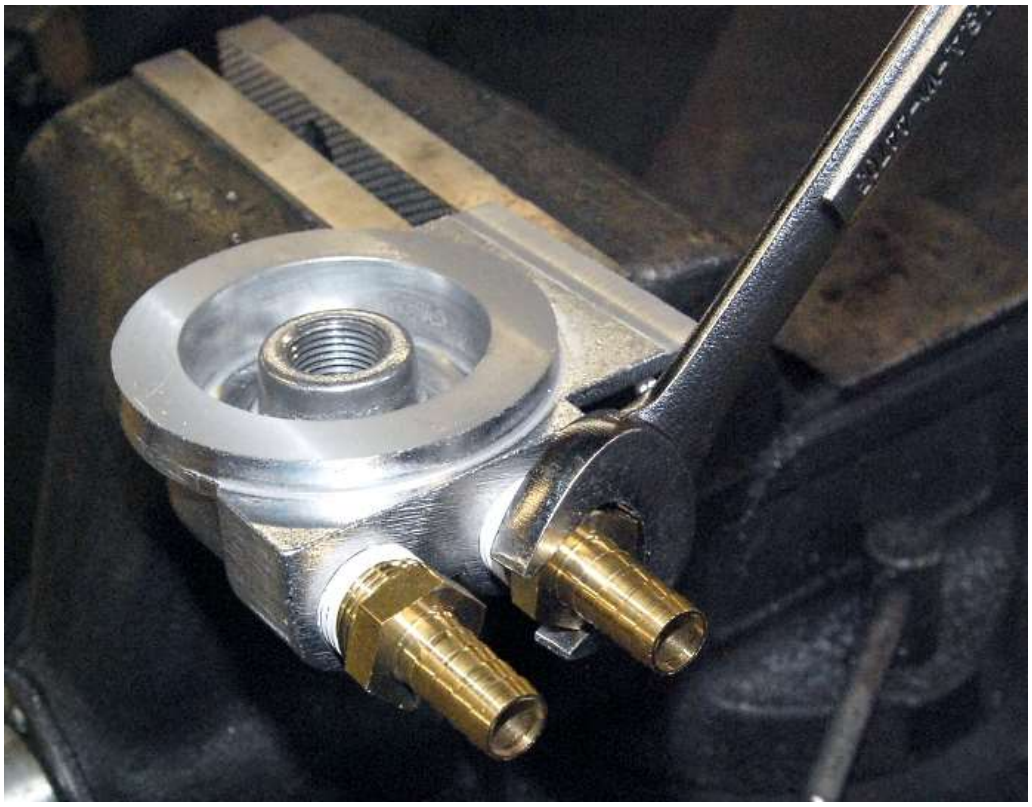

Use Teflon tape on the threaded barbs and thread them into the oil filter relocator.

Thread the short end of the threaded nipple into the relocator.

Mark the hole locations for the oil filter relocator on the old AC bracket or on the frame.
Drill the mounting holes for the relocator.

✋ Make sure to drill this before you install your engine. Otherwise, your drill will not fit in between the engine and the frame.

Frame prep

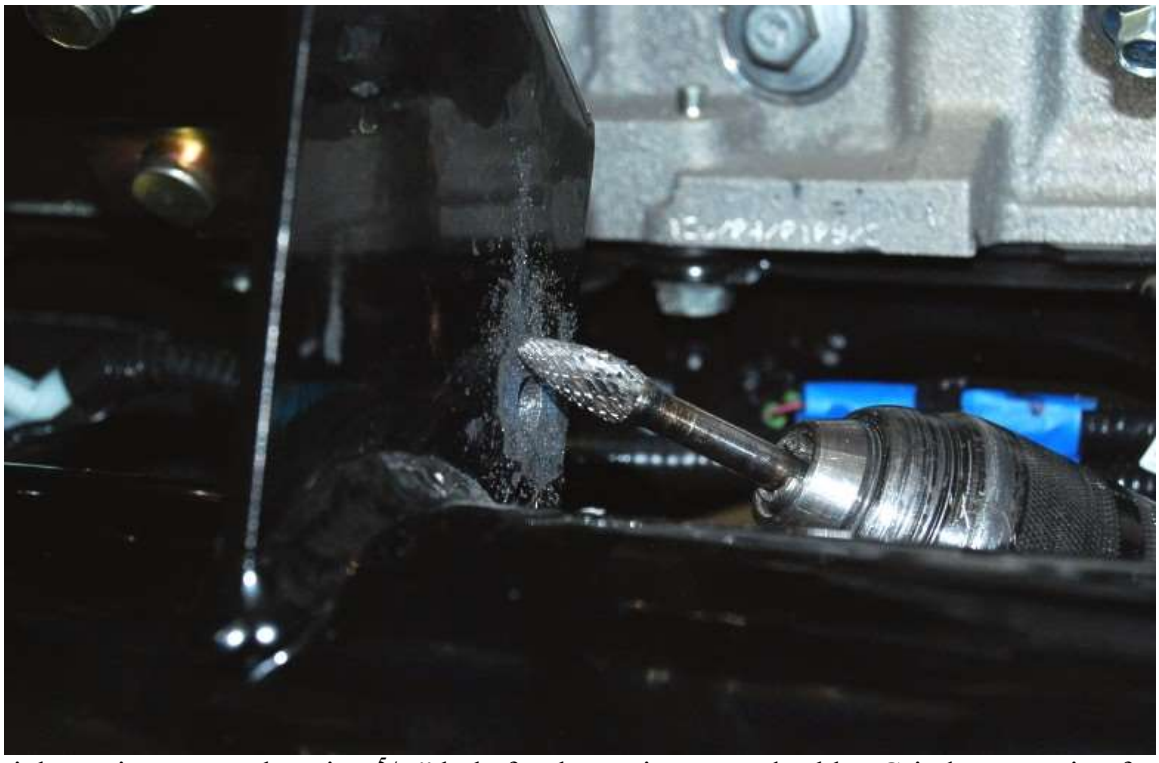

On the right engine mount there is a $^{5}/_{16}$" hole for the engine ground cable. Grind any coating from in and around the hole to give a good engine ground.

Engine/Transmission Installation

Lower the engine and transmission into place. The more hands you have to help the better. Go very slowly and make sure the transmission tail-shaft is above the rear cross-member.

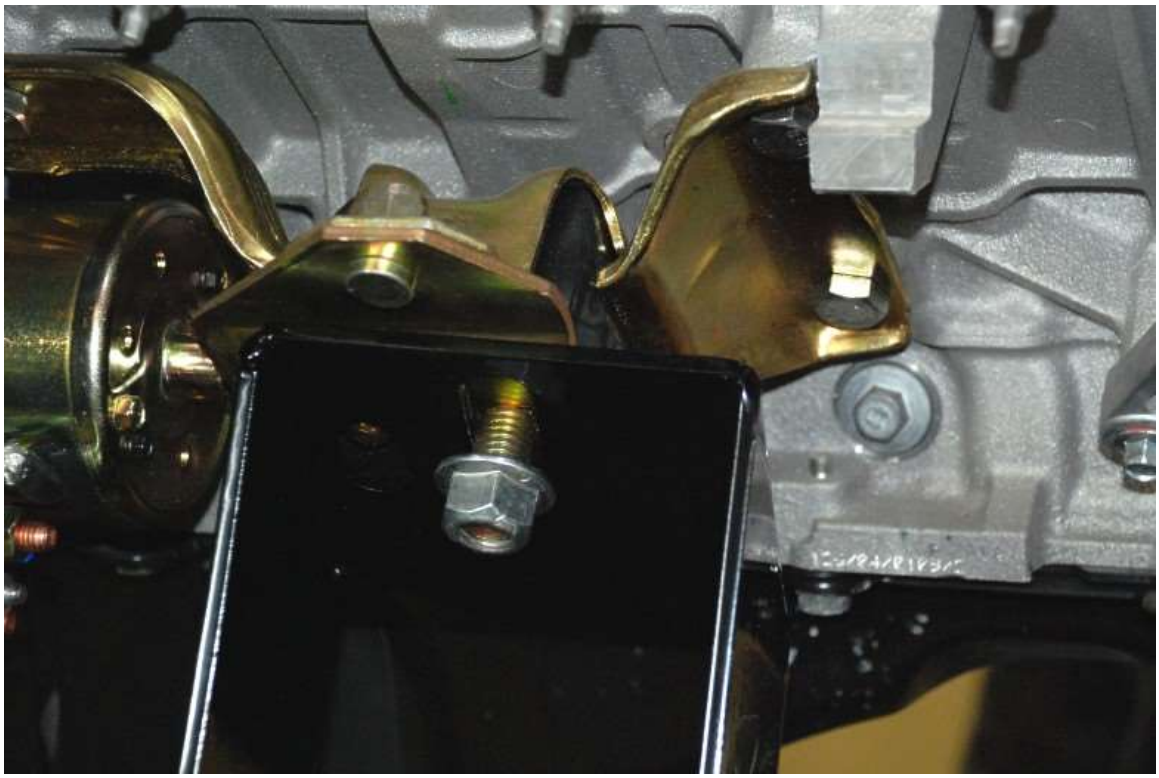

Install the engine mount to chassis nuts and tighten down all the engine mount hardware. Make sure the alignment pins on the mounts are in the holes on the chassis pads.

Transmission Mount

🛠 ¾” socket, ratchet

🚗 Transmission mount (Box 7), ½” x 1.25” Carriage bolts and ½” locknuts

Unpack the transmission mount and hardware.

Lift the transmission up and attach the mount to the frame. Normally this sits above the frame tabs but can be mounted underneath if extra clearance is needed.

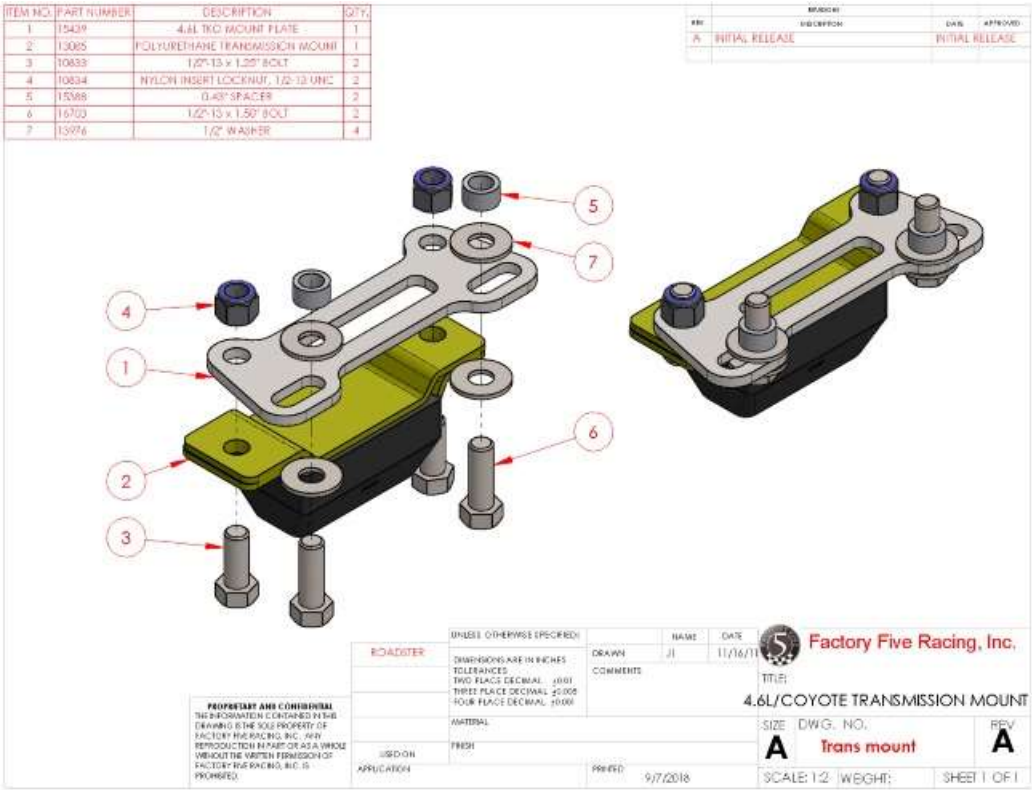

Depending on the engine/trans combination, install the bolts that hold the transmission to the mount and tighten all the hardware on the mount and frame. Coyote transmission mount shown above.

Engine Ground

🛠 Sand paper or grinder bit, ½" socket, ratchet, $^{3}/_{16}$" hex key

🚘 Electrical system completion components.

Attach the ground strap to the frame using a $^{5}/_{16}$" x 1" stainless button head screw, locknut, $^{3}/_{16}$" hex key, ½" socket and ratchet (complete kit only).

Battery Mounting and Cable

🛠 Drill, $^{3}/_{16}$", ¼", $^{5}/_{16}$" drill bits, rivet gun, marker, $^{7}/_{16}$" deep socket, ratchet, ½" wrench, $^{3}/_{16}$" hex key.

🚘 Secondary Body fasteners (Box 4), Battery/Tray components (Box 4), Insulated clip hardware (Box 4), Misc. electrical parts (Box 4), battery, electrical system completion components (complete kit only) (Box 27).

✋ Using the Group 34 battery is harder to remove if required.

Battery tray

Unpack the Battery/Tray components.

Position the battery on the battery tray front of the engine as shown above. It is centered side to side.

Mark the corners of the battery on the tray.

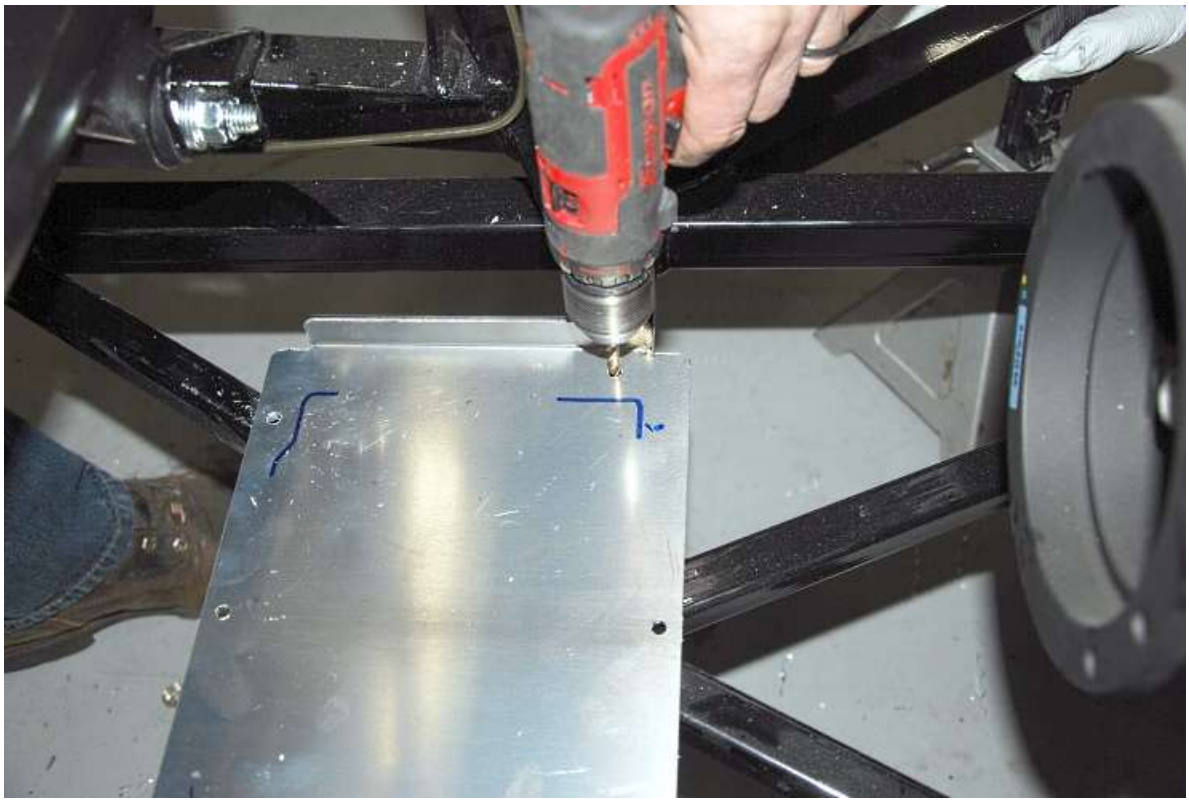

Drill (4) ¼” holes through the tray and 1” tubes in the front and the 1.50” cross tube so that the holes are outside where the battery will sit.

Remove the battery tray and on the 1” tube that is on the side of the negative post, remove any coating for the ground cable to connect.

Use one or two of the ¼” washers between the battery tray and the frame on the side of the positive post, and the ground cable on the negative side.

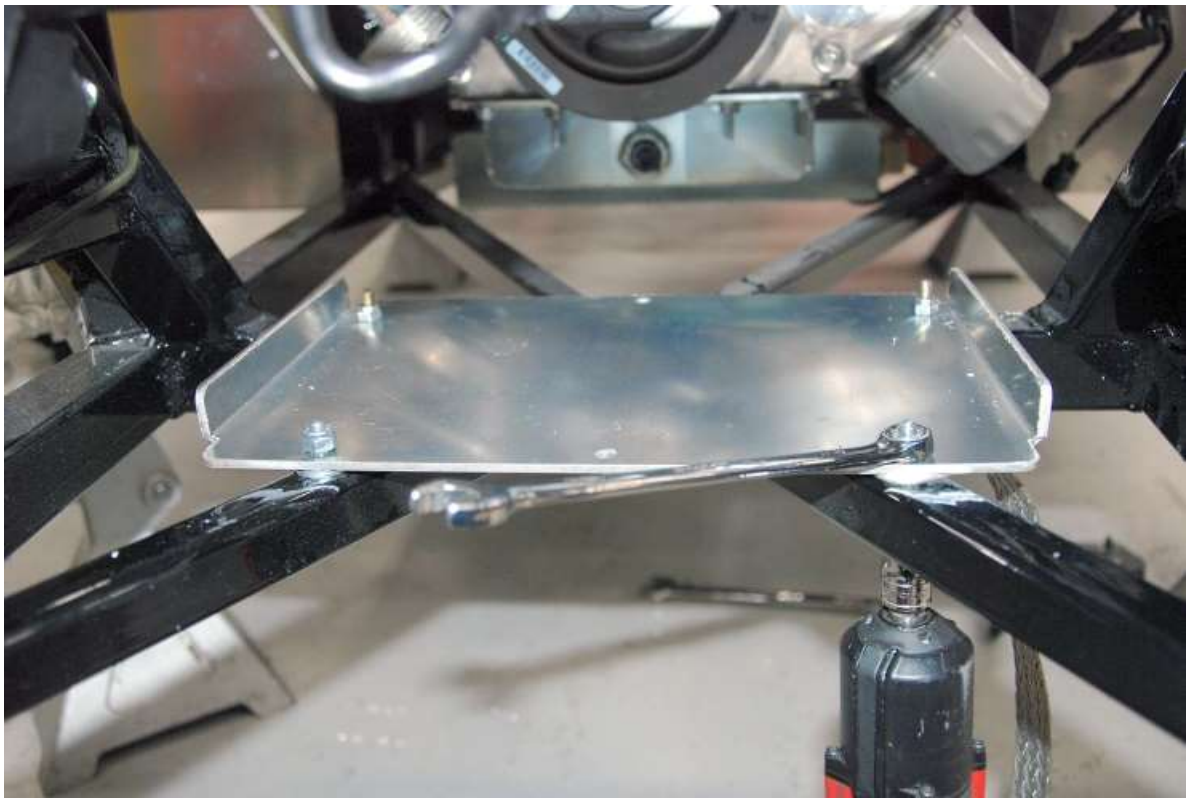

Use the ¼” x 2.25” bolts through the 1.50” tube and the ¼” x 1.75” bolts through the 1” tubes. Bolt from the bottom up using a $^{7}/_{16}$” wrench, socket, and ratchet.

Place the battery on the tray with the crossbar hold-down.

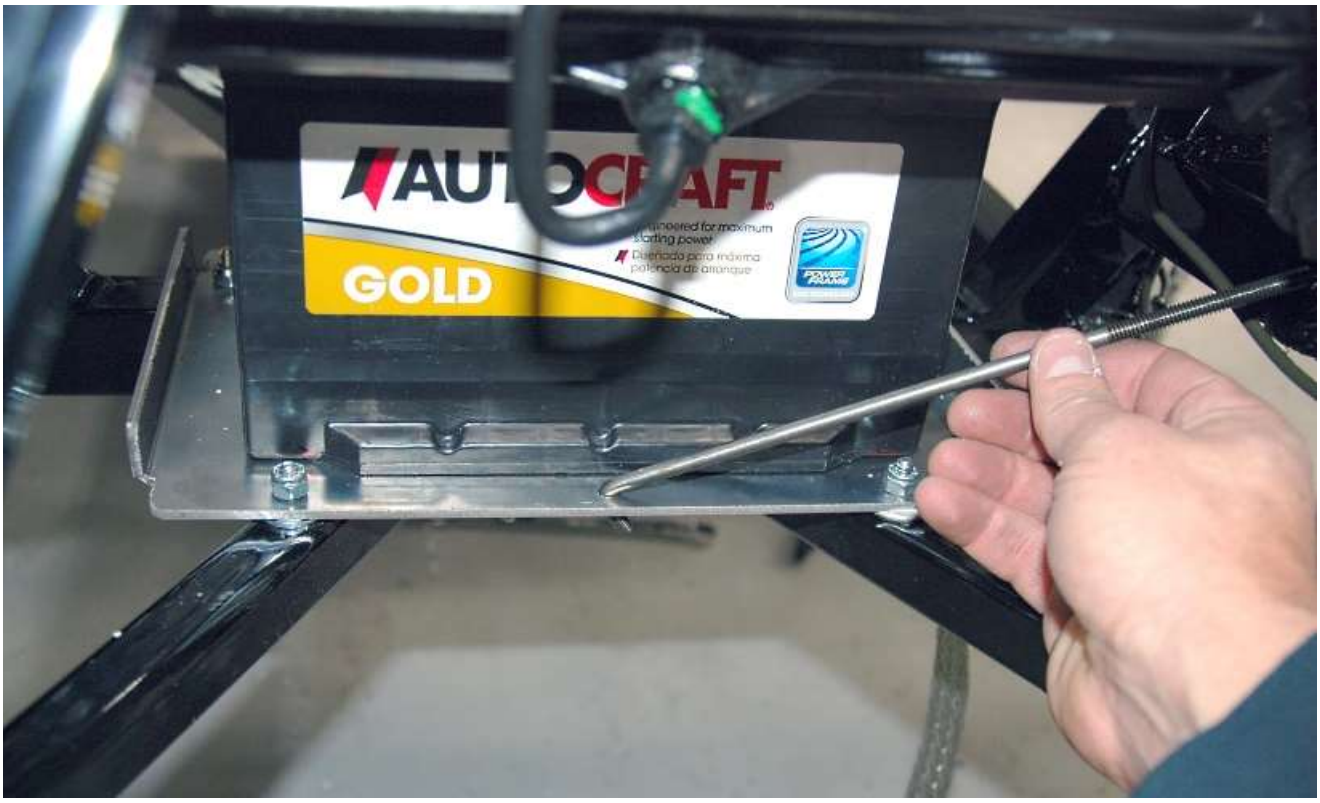

Insert the J bolts through the battery tray and up through the hold-down.

Bolt the hold-down to the tray using the ¼" washers, locknuts, $^{7}/_{16}$" deep socket and a ratchet.

Battery cable

Attach the positive battery cable to the battery.

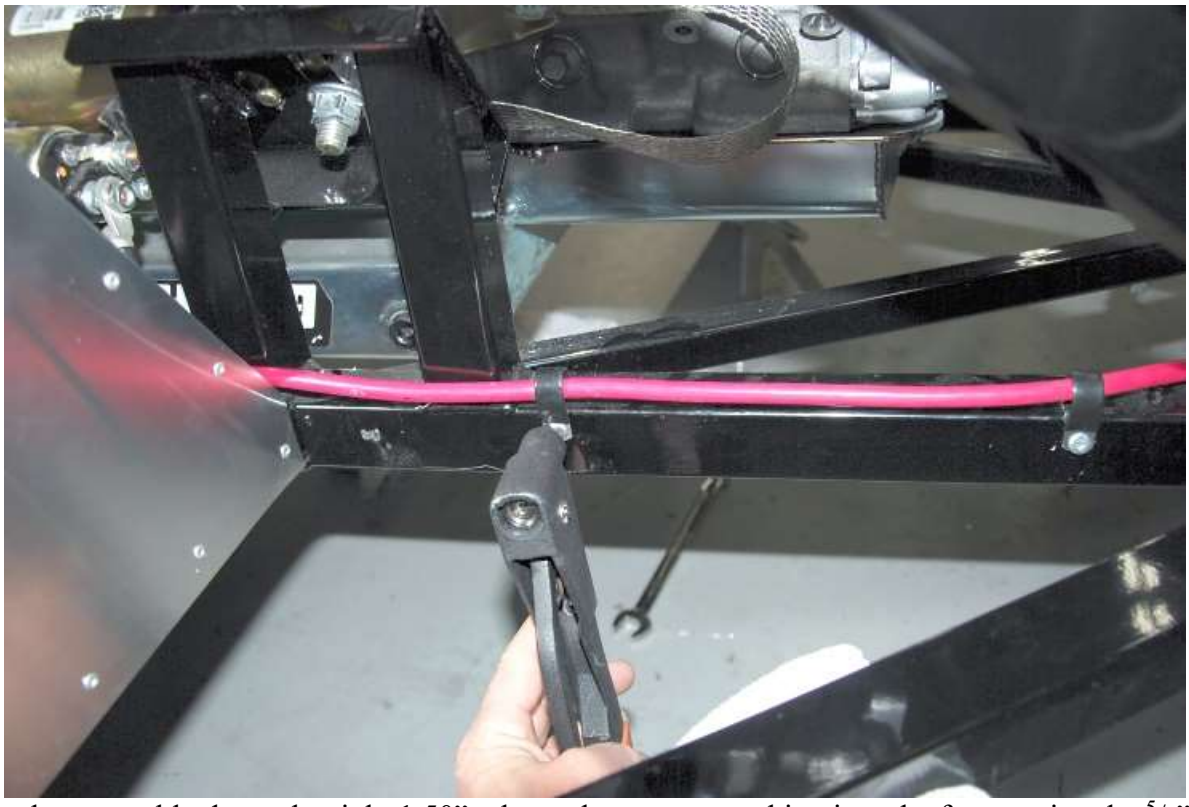

Run the battery cable down the right 1.50” tube to the starter attaching it to the frame using the $^{5}/_{8}$” clamps and $^{3}/_{16}$” rivets.

Attach the battery cable to the battery post on the starter.

✋ Do not connect the negative lead to the battery until all the wiring on the vehicle is finished.

Headers and J-pipes

🛠 $^{7}/_{16}$", $^{9}/_{16}$" wrenches, $^{7}/_{16}$" socket, ratchet, extension, $^{5}/_{16}$" hex key

🚘 Headers or straight tubes and shorty headers or catalytic convertors and shorty headers

Mount up your headers to the engine. If you are using full length headers they bolt in place with the gaskets and hardware provided. Thread locker is recommended.

If you are using Shorty headers or stock manifolds bolt them back on. On a small block (302 or 351) the headers are switched side to side and on the 4.6L the headers are flipped upside down. In either case this puts the collector toward the front.

If you are using j-pipes bolt them to the headers. The shorter pipe will go on the right side.

Fuel line to engine

🛠 flat head screwdriver
🚘 Fuel line components, external fuel pressure regulator (if used)

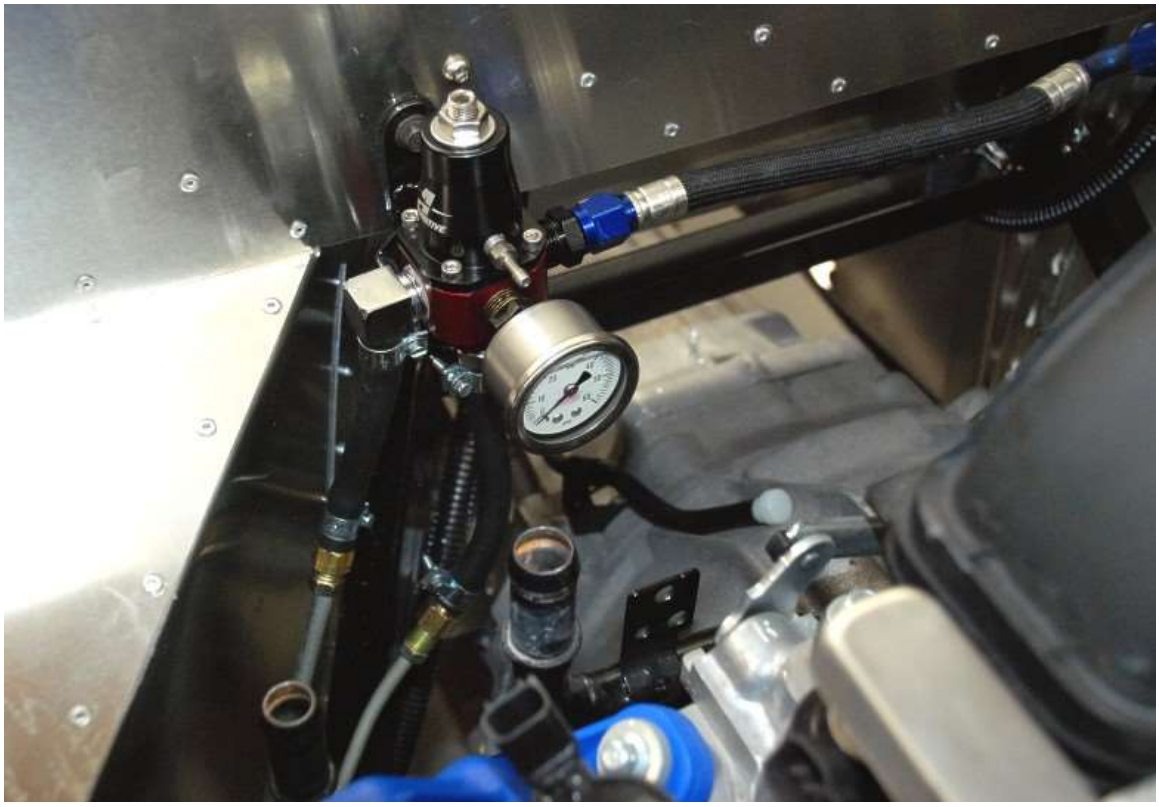

Finish running your fuel system by hooking up either to your carburetor or fuel rail. Here we mounted a pressure regulator on the firewall and ran a single line over to the rail.

Oil Filter Relocator

🛠 Razor knife, flathead screwdriver

🚘 Oil filter relocating kit, oil, oil filter

✋ This is needed for push rod 302/351 engines using J-pipes only. The coyote engine uses different exhaust and a different oil filter

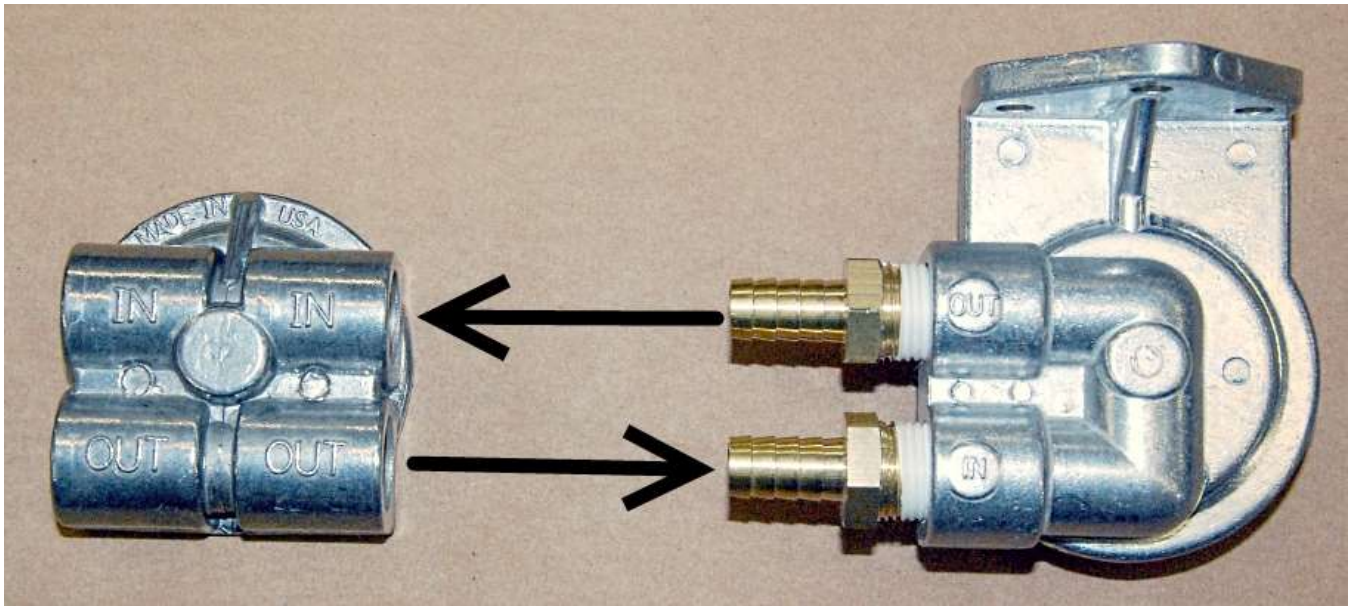

Hook the oil lines up to the Oil filter Relocator and the adapter on the engine. Make sure that the lines go to the correct ports or the engine will be starved for oil. The **out** on the engine goes to the **in** on the Relocator and the **out** on the Relocator goes to the **in** on the engine.

Locate and attach the relocator to the chassis where the hoses will reach and will not get burned by the exhaust or hit by the steering shaft.

Clutch Cable

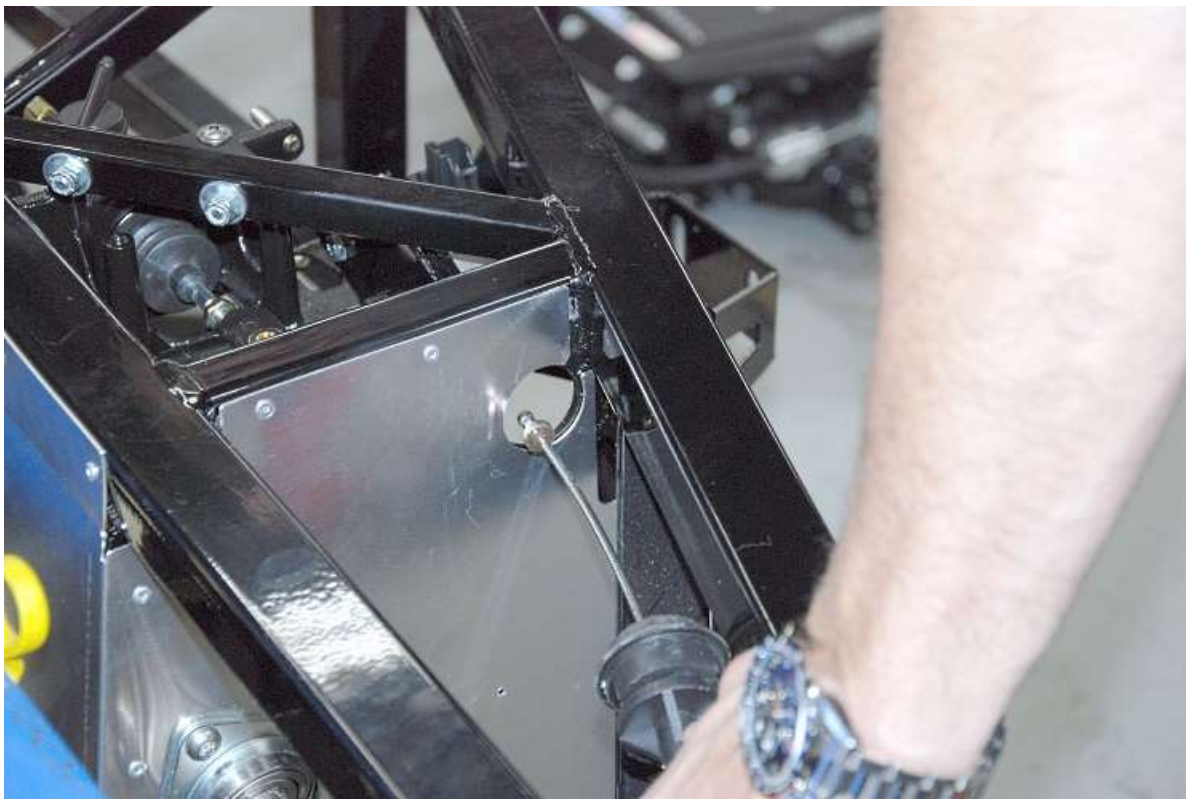

Slide the clutch cable boss through the front of the driver footbox.

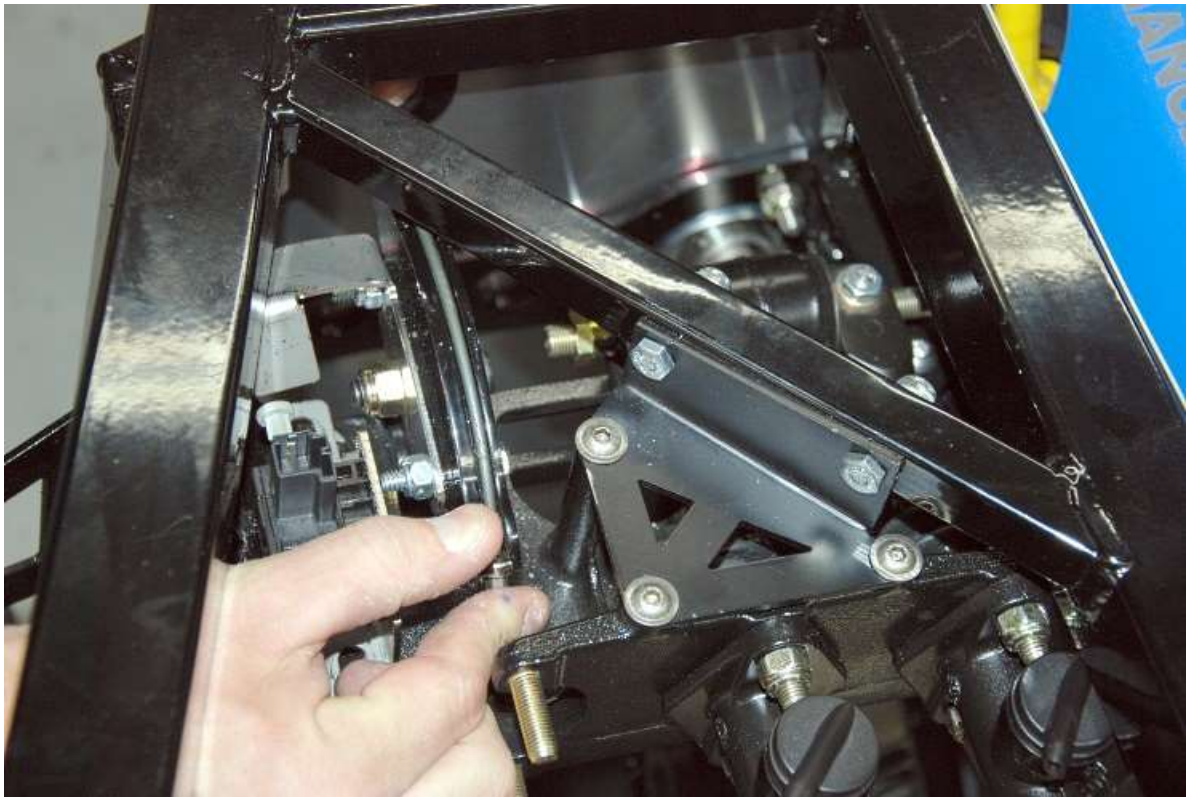

Hook the clutch cable over the quadrant.

Attach the clutch cable to the front of the footbox using the small #8 screw provided and ¼” wrench.

Route the clutch cable down to the bellhousing. Using zip ties or insulated clips tie the cable safely away from the headers and the moving steering components. It can be fastened to the engine using the bracket on the cable to the front lower bolt that holds the starter cable just before it leaves the block or, to the lower engine bay ¾” tubing.

✋ Make sure that the cable is clear of the hot exhaust header and the steering shaft or the cable may fail prematurely.

Connect the clutch cable to the bellhousing and the clutch fork.

Thread the cable end adjuster nut on so that the cable has no play in it.

Adjust the pedal closer or further away as desired by screwing the pedal stop screw up or down.

Check the full range of travel for the clutch pedal.

Accelerator Cable

- Accelerator cable components, insulated clip hardware
- The cable design is set up for a 96-04 4.6L Mustang engine but using the supplied ball studs and retainers it can be adapted for all applications.
- If running a 4.6L engine, do not do the first 2 steps.

Cut the barrel fitting off the end of the cable.

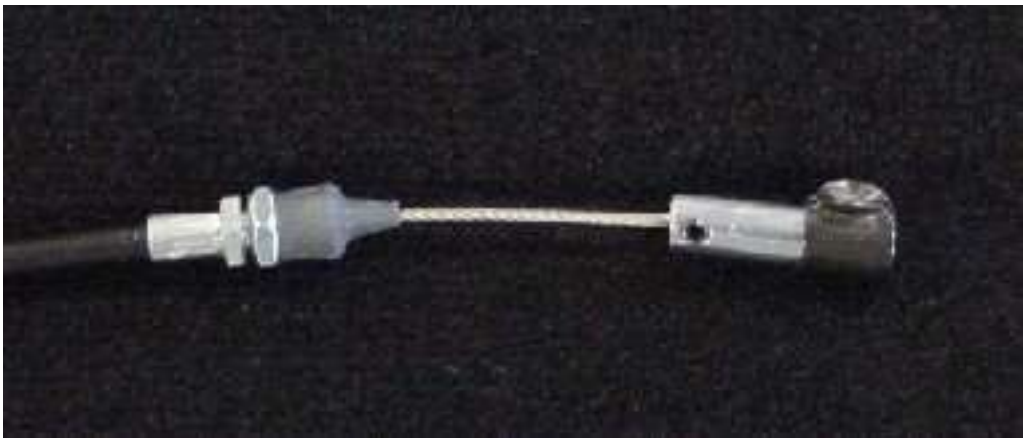

Push and twist the ball stud retainer onto the end of the cable and attach the ball stud retainer using a $^{5}/_{64}$" hex key.

87-93 5.0L Fuel Injected Applications

Run the accelerator cable to its proper position on the engine.

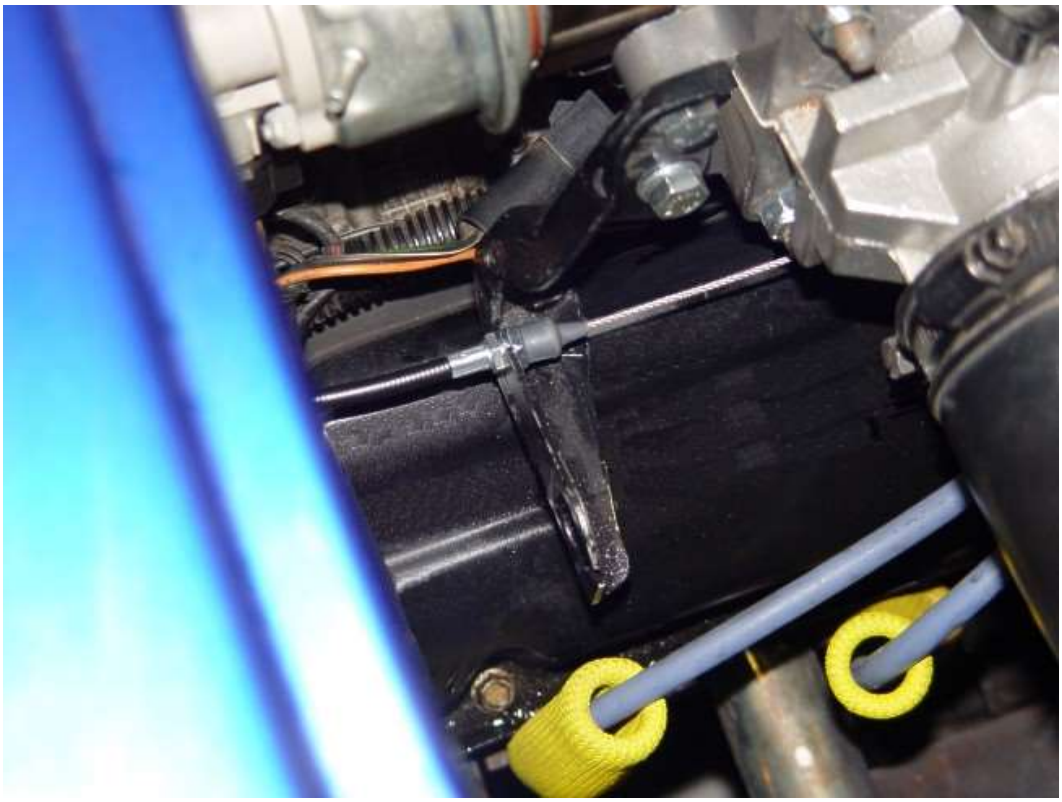

Attach the engine end of the cable sheath to the cable mount on the intake using ⅜" and 7/16" wrenches and push the cable wiper onto the remaining threads.

There is a ball stud and retainer in the accelerator cable components to help attach to the throttle body on 87-93 applications.

Push the ball stud retainer onto the ball on the bottom of the throttle body.

Make sure the accelerator cable is tied up and out of the way of moving or hot parts as well.

Check the idle screw underneath the throttle body to see if the throttle arm is hitting it. If it is not, either loosen the ball stud retainer set screw and readjust the cable or, bend the small tab behind the accelerator

pedal until the idle screw hits the throttle arm. You will notice a high idle later when the car starts if the throttle is held open.

Carbureted applications

Attach the cable sheath to your cable mount on the engine.
If necessary, attach the supplied ball stud to the carburetor in the appropriate location. Refer to the carburetor instructions for placement.
Attach the ball stud retainer to the ball stud.

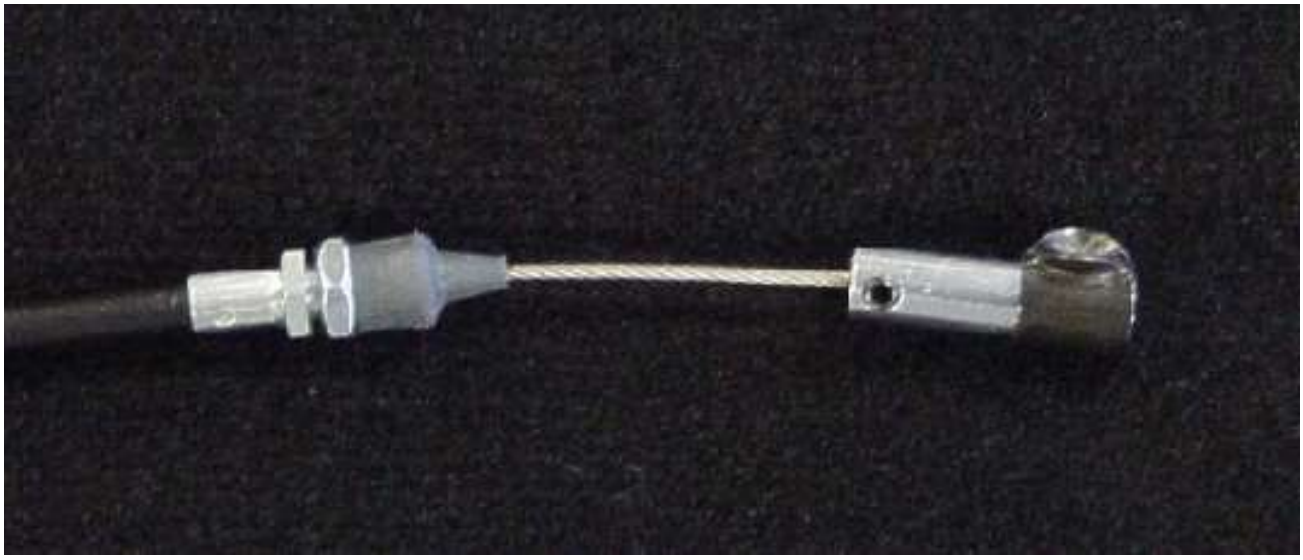

Push and twist the ball stud retainer onto the end of the cable and attach the ball stud retainer using a $^{5}/_{64}$" hex key.

Attach the engine end of the cable sheath to the cable mount on the engine using ⅜" and $^{7}/_{16}$" wrenches and push the cable wiper onto the remaining threads.

While pulling the cable tight, push the accelerator pedal up until the ball stud retainer hits the end of the throttle cable and clip off the cable ball fitting end so that the cable is long enough to go into the ball stud retainer $^{3}/_{8}$" and get tightened with the set screw.

Push and twist the ball stud retainer onto the end of the cable and attach the ball stud retainer using a $^{5}/_{64}$" hex key.

Check the full range of the accelerator pedal travel to ensure that there are no interferences with the pedal or travel.

✋ After driving the car for the first time you may want to adjust the lower pedal location for optimum heal/toe and shoe size differences.

Engine Wiring

🛠 Drill, $^{1}/_{8}$" drill bit, silicone, caulk gun, rivet gun

🚘 Mounted aluminum, secondary body fasteners

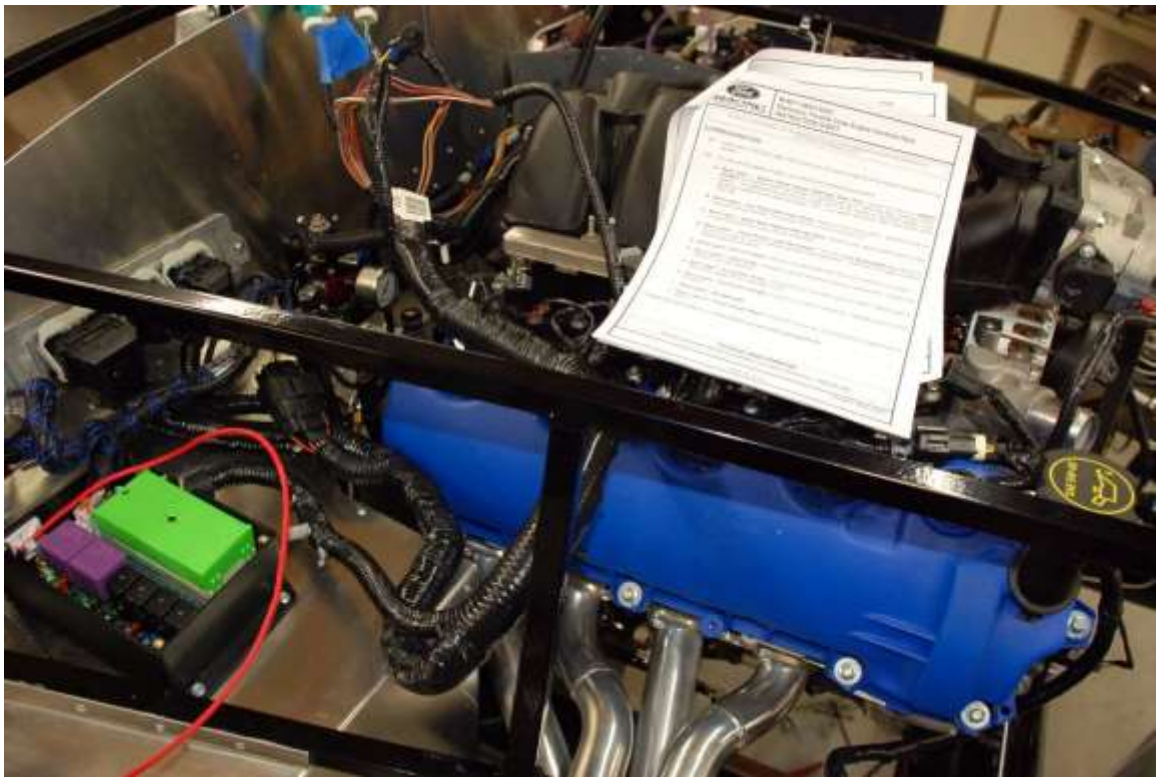

Refer to either the chassis harness instructions or if you are running a stand-alone harness refer to those instructions.

Cooling System

Marker, Hack saw, Insulated Clip hardware, Drill, ¼" drill bit, $^{3}/_{16}$" Hex key, $^{7}/_{16}$", ½" wrenches, ruler, flathead screwdriver.

Fan mounting components (Box 7), Stainless Radiator Hose kit (Box 7), Roadster cooling system (Box 29), insulated clip hardware (Box 4), packaged aluminum Box 10)

Unpack the roadster cooling system assembly.

Fan Mounting

$^{1}/_{8}$" hex key, $^{3}/_{8}$", $^{7}/_{16}$" sockets, $^{3}/_{16}$" drill bit, drill, ratchet.

Fan, Fan mount, fan mount strap, #10 x $^{5}/_{8}$" black button head screws, #10 locknuts

Unpack the fan mounting hardware.

Insert the fan mount into the fan from the bottom.

Put the fan mounting strap on top of the fan using the larger single hole at the end.

Thread on the lock nut and tighten with a $^{7}/_{16}$" deep socket.

Place the fan on the radiator so the wires go toward the bottom, rotate the mounts so that the smaller holes line up with the radiator flange then drill $^{3}/_{16}$" holes through radiator flange using the mounting strap holes as a guide.

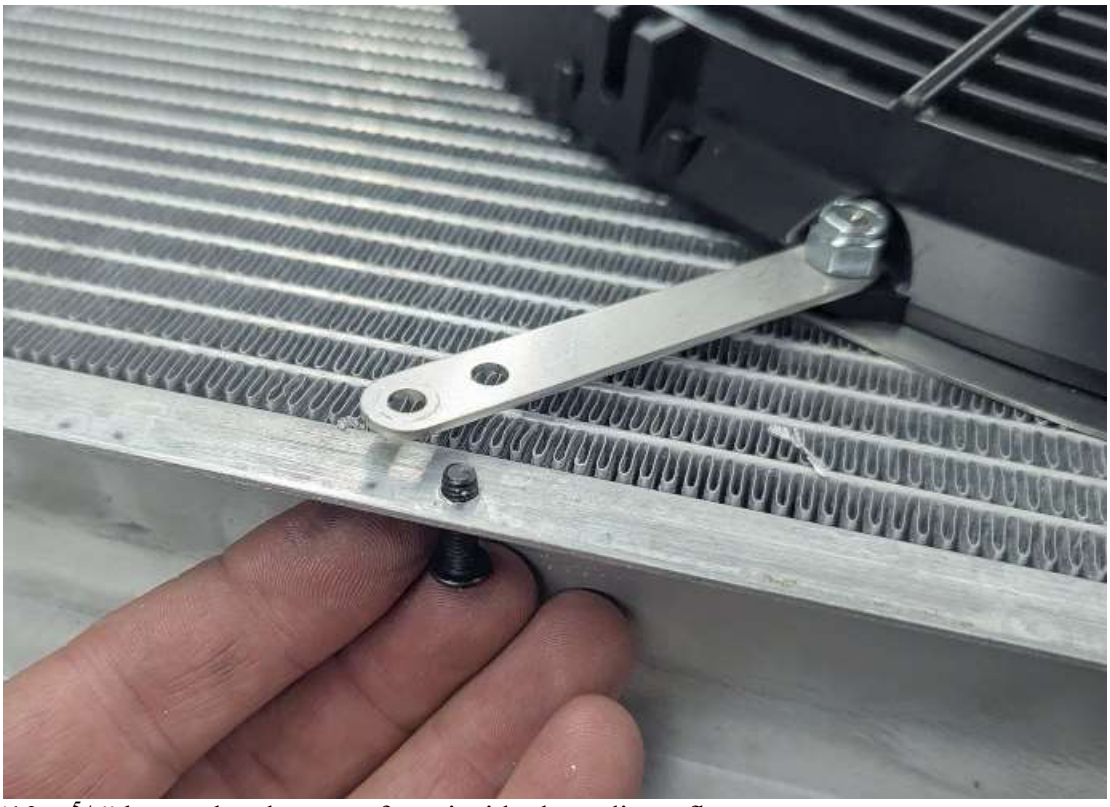

Run the #10 x $^{5}/_{8}$" button head screws from inside the radiator flange out.

Place a #10 washer on the screw then the radiator mounting strap and locknut. Use a $^{1}/_{8}$" hex key and $^{3}/_{8}$" socket.

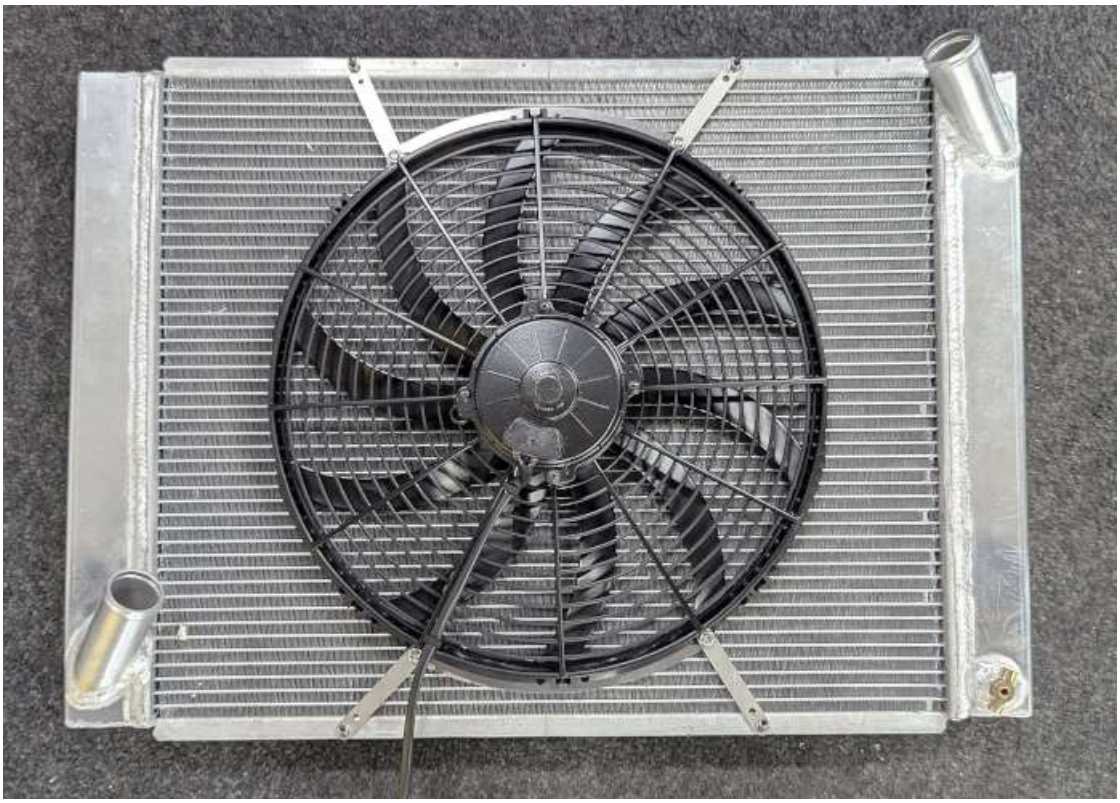

Radiator mounting – Mustang

For Complete kit, skip to next section.

(4) $^{5}/_{16}$" x ¾" carriage bolts, (4) $^{5}/_{16}$" locknuts, (4) ¼" x $^{5}/_{8}$" Button head screws, (2) ¼" x 1.25" Button head screws, (6) ¼" locknuts, (2) #10 x $^{5}/_{8}$" black button head screws, (2) #10 locknuts, Mustang radiator install parts (Box 7).

Clamps, $^{1}/_{8}$", $^{3}/_{32}$" Hex key, $^{3}/_{8}$", $^{7}/_{16}$" socket, ratchet, Drill, $^{3}/_{16}$", ¼" drill bit.

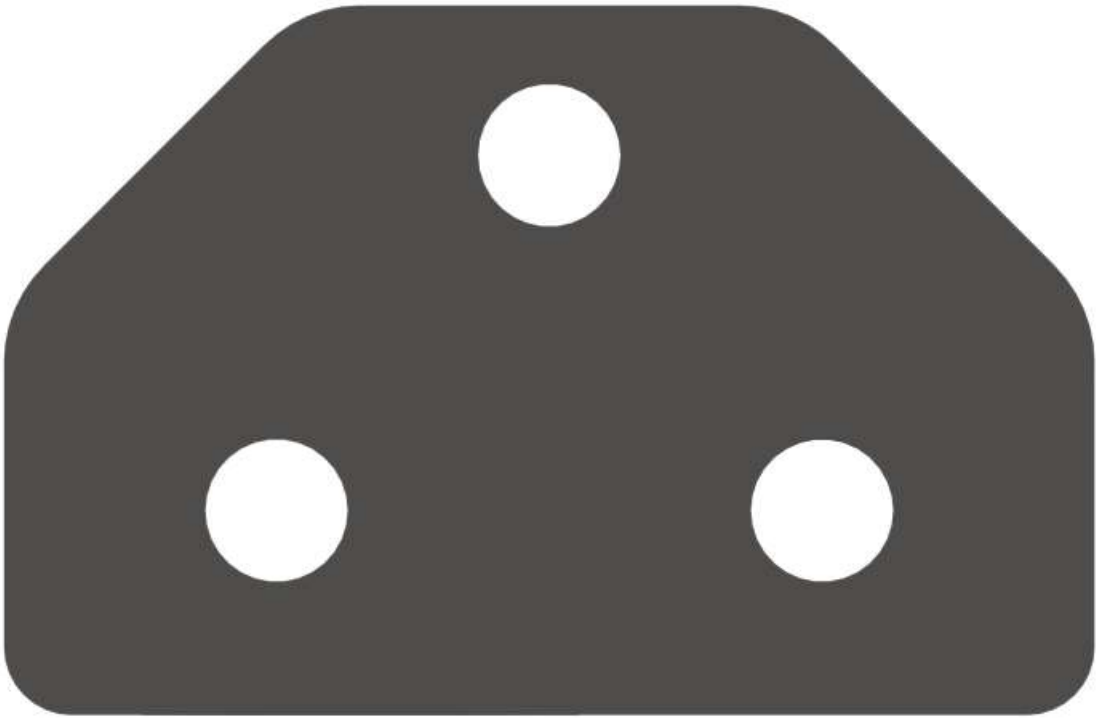

Locate the (2) Mustang radiator lower mounts.

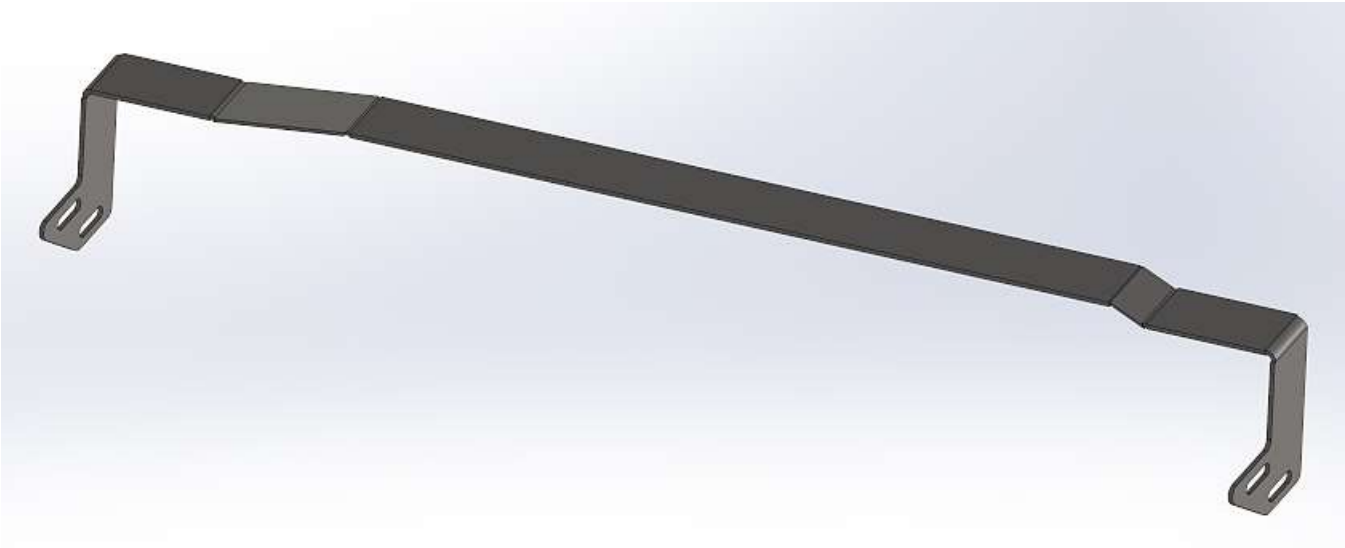

Locate the Mustang radiator top mount.

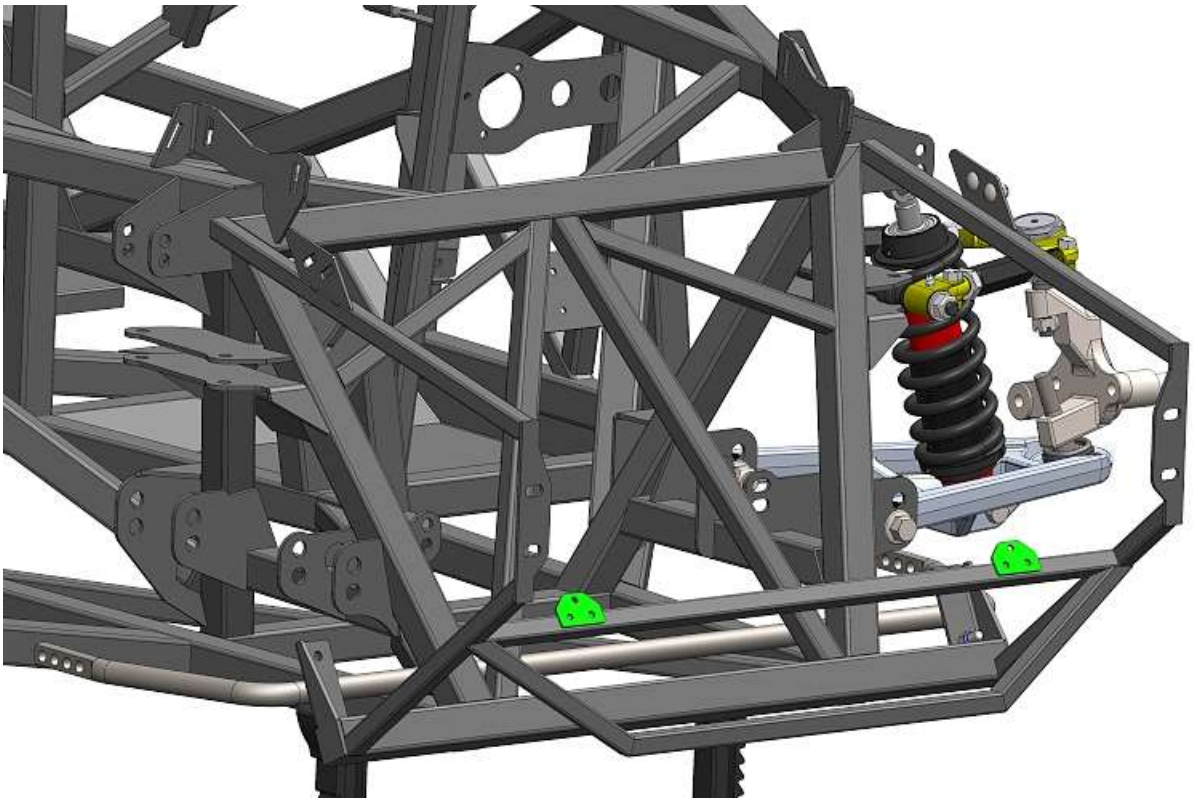

Clamp the lower mounts to the radiator mount bar on the frame.

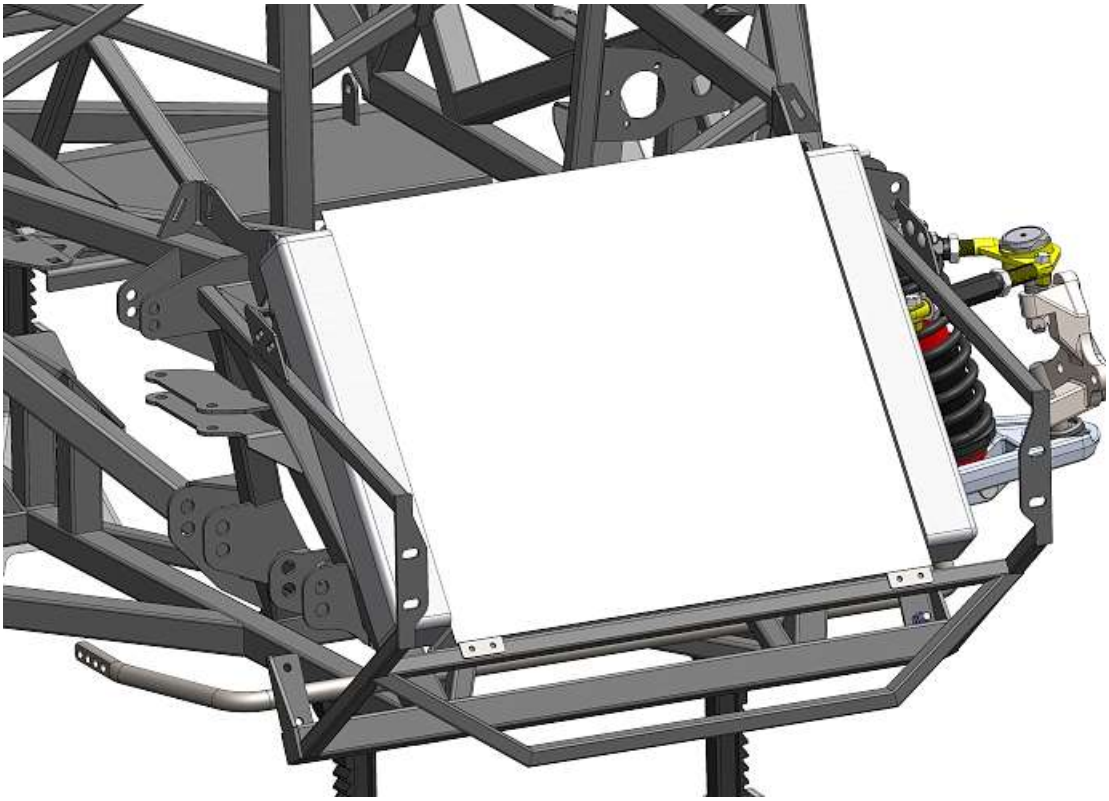

Lower the radiator down so the lower brackets are behind the lower radiator flange. Adjust the lower mount locations as needed so the radiator is centered.

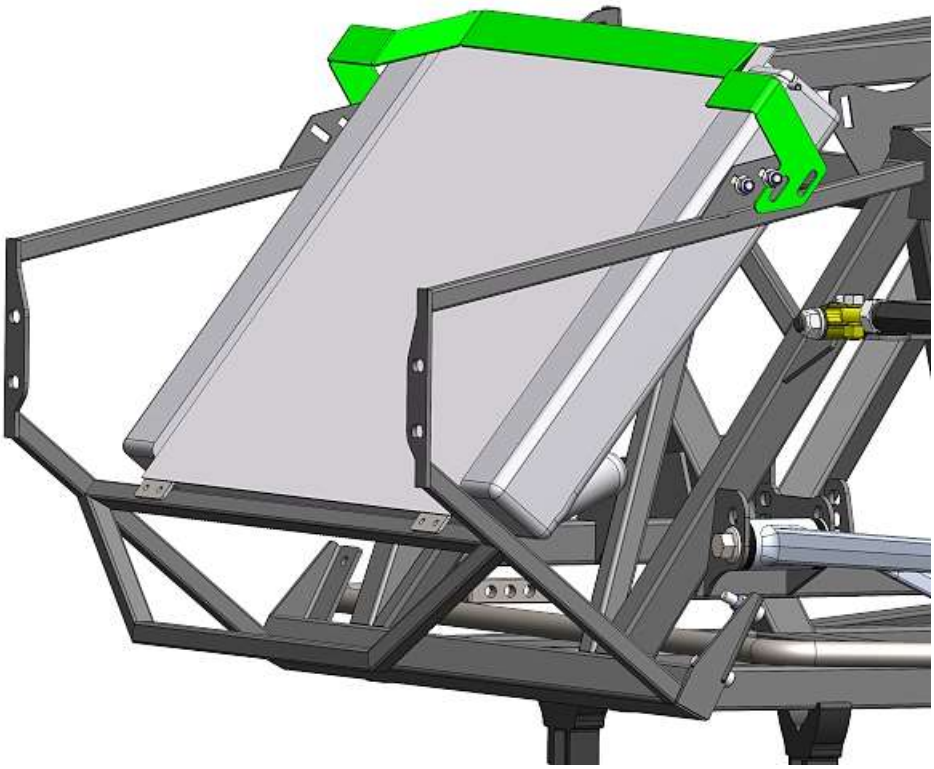

Clamp the Mustang top radiator bracket to the top front of the radiator.

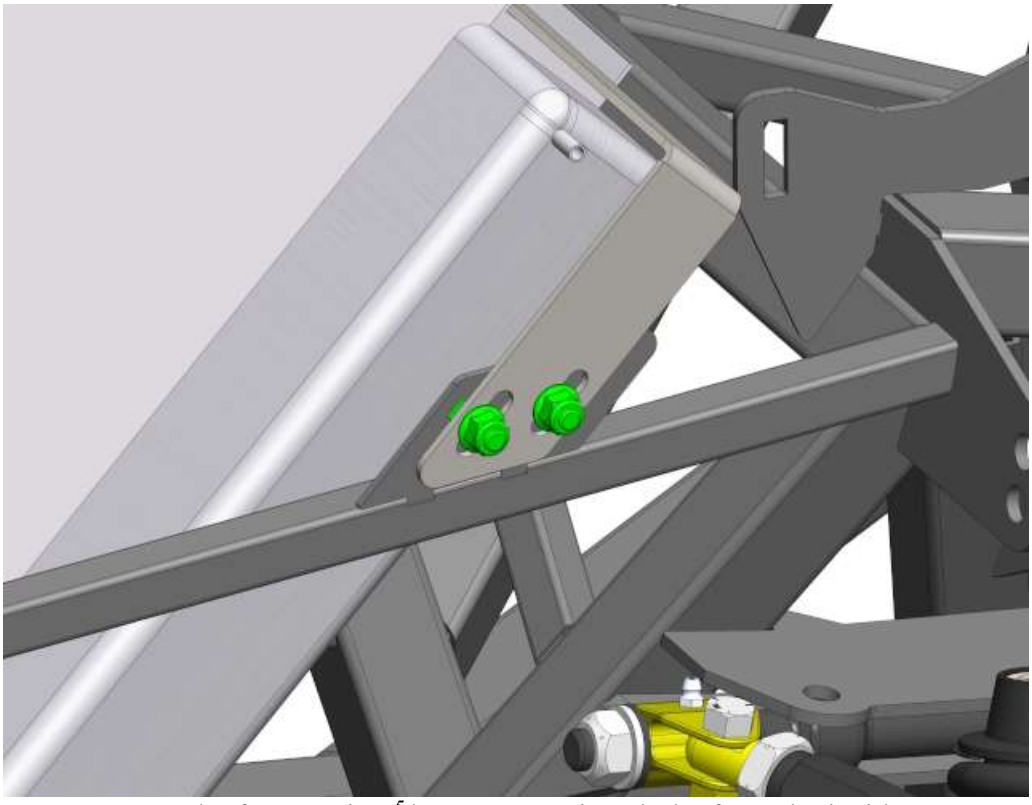

Attach the upper mount to the frame using $^{5}/_{16}$" x ¾" carriage bolts from the inside out.

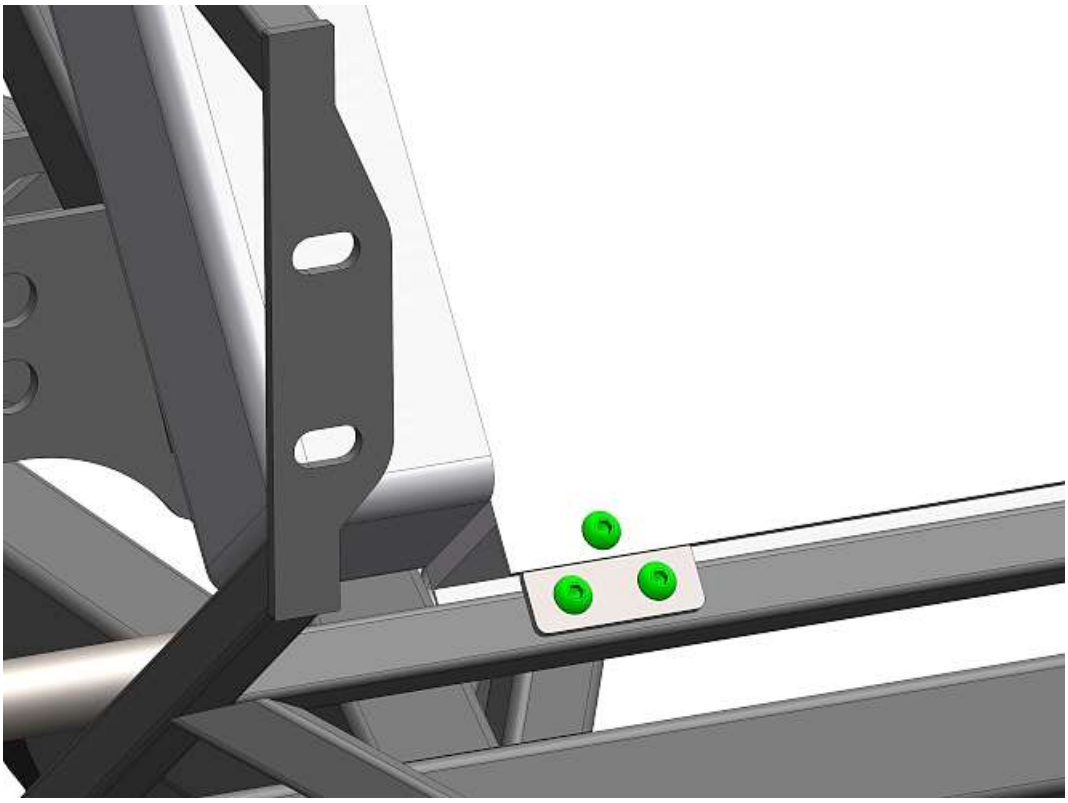

Drill ¼” holes through the lower radiator mount and tube and attach the mounts to the frame using (2) ¼” x 1.25” button head screws and locknuts.

Drill a ¼” hole through the radiator flange then mount the radiator to the lower mount using a ¼” x $^{5}/_{8}$” button head screw and locknut.

Repeat on the other side.

🛠 Drill $^{3}/_{16}$” holes through the top radiator mount bracket and radiator flange and attach it using #10 x $^{5}/_{8}$” button head screws, locknuts, $^{1}/_{8}$” hex key and $^{3}/_{8}$” socket.

Radiator mounting – complete kit

🚗 (4) $^{5}/_{16}$” x ¾” carriage bolts, (4) $^{5}/_{16}$” locknuts, (2) ¼” x 1.25” button head screws, (2) ¼” locknuts, (2) #10 x $^{5}/_{8}$” black button head screws, (2) #10 locknuts, Radiator top mount (Box 7)

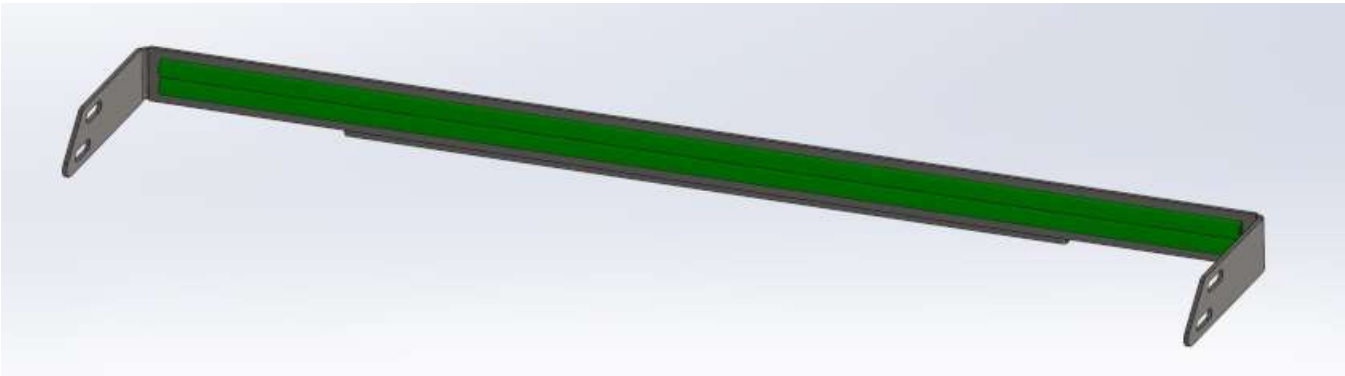

Attach 30” of half-moon stick on weather stripping to the underside of the radiator top mount bracket.

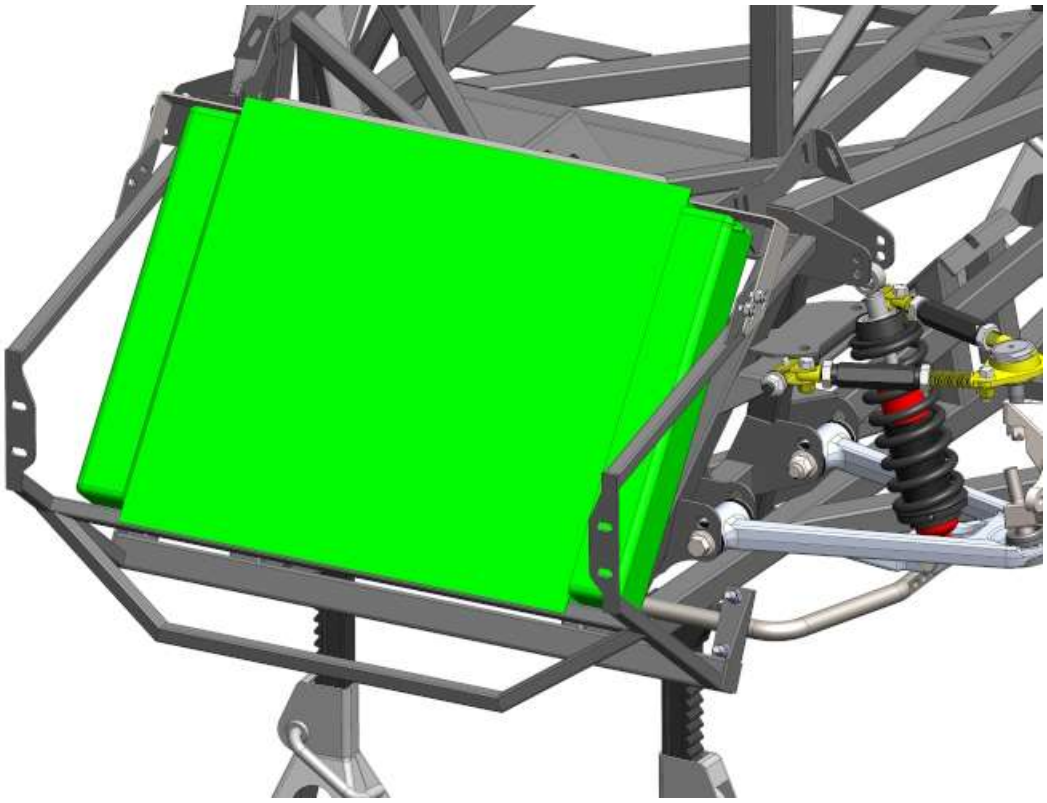

Slide the radiator over the frame lower radiator mount.

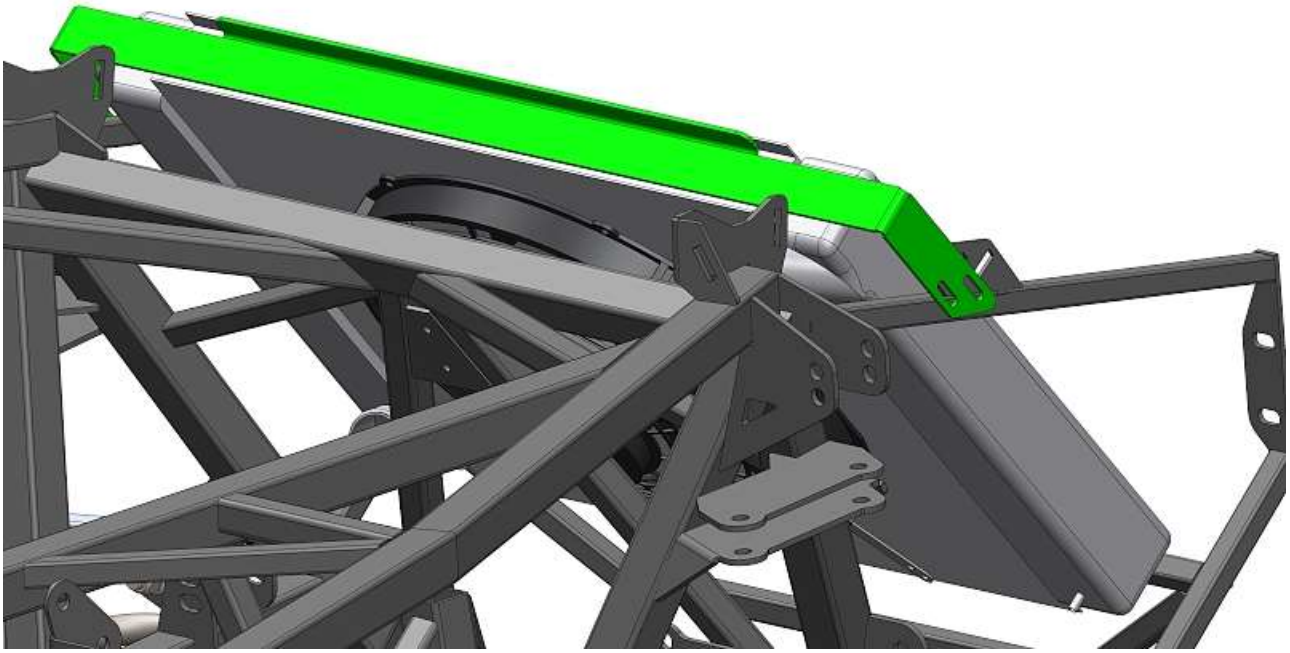

Position the top mount bracket on the top of the radiator so that the small tab sticking up is on the front side of the bracket touching the radiator top flange.

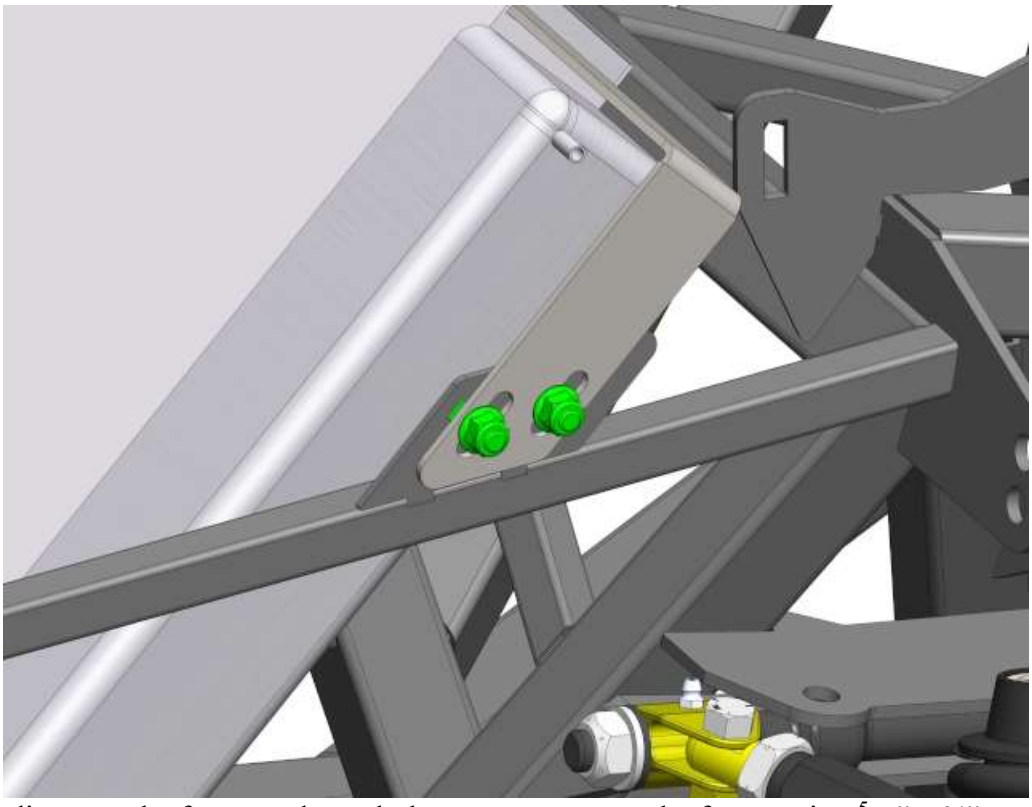

Center the radiator on the frame and attach the upper mount to the frame using $^{5}/_{16}$" x ¾" carriage bolts from the inside out.

Drill $^{3}/_{16}$" holes through the top radiator mount bracket and radiator flange and attach it using #10 x $^{5}/_{8}$" button head screws, locknuts, $^{1}/_{8}$" hex key and $^{3}/_{8}$" socket.

Mount the radiator bottom flange using (2) ¼” x 1.25” button head screws and locknuts, one in each lower corner.

A/C Evaporator

If installing an A/C system, the Condenser will mount in front of the radiator. Now is a good time to attach this.

Stainless Radiator Hoses

- Radiator hose kit (Box 7)

Unpack the stainless radiator hose kit and hose connectors.

Use the smaller sections of tube inside the adapters to fit them to smaller fittings on the radiator and intake.

Then fit the larger adapters over them.

Upper radiator hose

Start at the engine and route the tube over to the upper radiator hose location.

Mount the inline filler neck where it is both accessible and as high as possible in the upper hose.

Mark the tube where it needs to be cut so that the tube will just touch the attaching location. Remove the tube from the vehicle.

Cut the tube using a hack saw or if available a cut-off wheel. If necessary clean the end up with tin snips or a grinder.
Shake and blow the tube out so that no metal pieces are in the tube.
Reattach the tube assembly to the engine and tighten the hose to the radiator.

Lower radiator hose

Connect the lower radiator tube to the engine.
Run the tube next to the frame and under the steering rack to the radiator. Route the lower tube with enough slack to be able to adjust the radiator for the nose aluminum.
Make sure that the lower hose is not hanging down. If necessary, zip tie the hose to the frame.
Mark the tube where it needs to be cut so that the tube will just touch the attaching location.
Remove the tube/hose assembly from the vehicle.
Cut the tube using a hack saw or if available a cut-off wheel. If necessary clean the end up with tin snips or a grinder.
Shake and blow the tube out so that no metal pieces are in the tube.
Remount the tube assembly and tighten the hose clamps on the mount locations.
Where the tube goes against the frame use one of the extra adapters and some kit zip ties to hold it against the frame to prevent any shaking or wear while driving.

✋ After running the car for the first time once coolant is added and while the system is still warm, retighten the hose clamps used on the cooling system.

Overflow Tank

Pick the mounting location for the tank and mark the holes. Make sure the tank is accessible and visible inside to check the level on the finished car then bolt it in place.

Using the bracket as a template drill ¼” mounting holes.
Mount the reservoir using the ¼” screws, 5mm hex key and $^{7}/_{16}$” wrench.

Attach the reservoir to the mounting bracket ¼” screw, 5mm hex key and $^{7}/_{16}$” wrench.

Route the overflow hose from the filler to the overflow tank.

Make sure you attach the hose to the tube that runs off the bottom of the tank and not the one that extends up into the tank.

Put the radiator cap in place on the filler for now so it does not get lost.

- There is a thermostatic fan switch provided that can be used to activate the fan. When the engine reaches 185°F, the switch will ground which will ground the relay in the fuse panel and turn the fan on. There is also a wire for this located with the fan wires at the radiator if desired.
- If using an EFI engine usually the engine computer will control the fan and the thermostat switches are not needed. The following step can be missed.

In your engine block or cylinder head, locate a coolant access point to install the thermostat switch and screw it in.

Fan Wiring

🛠 Wire crimp tool

Misc. electrical components.

Attach the cooling fan wires according to the wiring harness manual.

Speedometer Sending Unit

11mm deep socket, ratchet, wire crimping tool

Speedometer sending unit components, misc. electrical components

The sending unit connection is only needed if the Speedometer is not GPS controlled.

If the transmission does not have a block-off plate, the sending unit will need to get installed to prevent a transmission fluid leak.

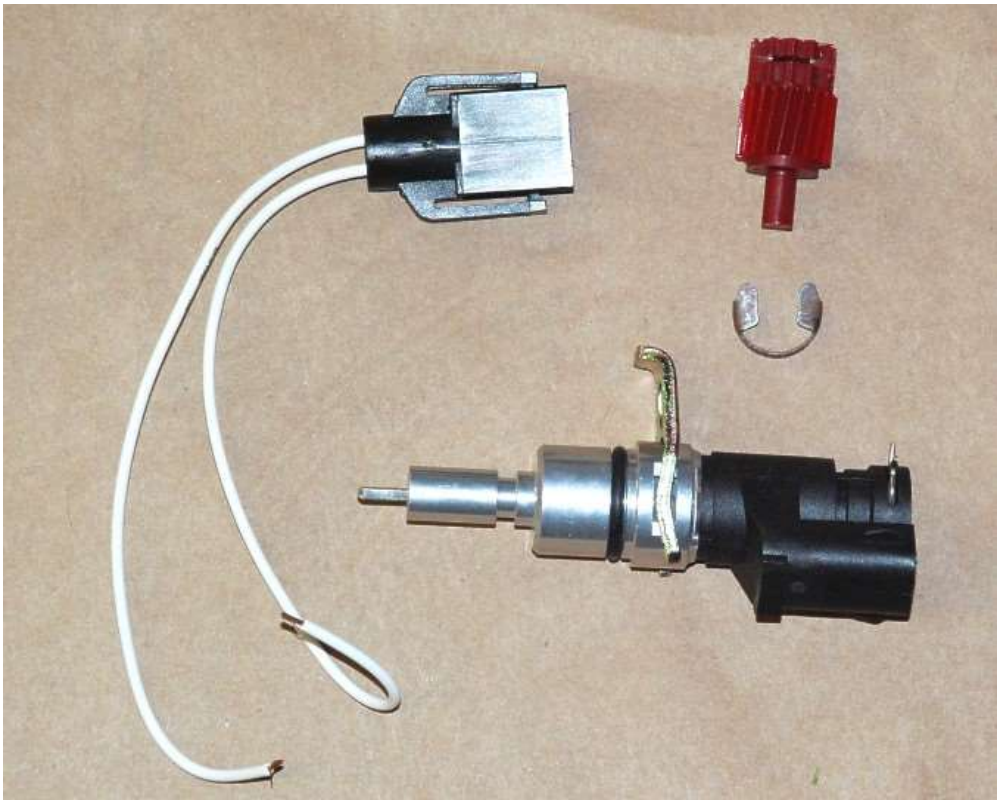

Unpack the speedometer sending unit components.

Install the gear on the end of the sender and hold it in place with the clip.

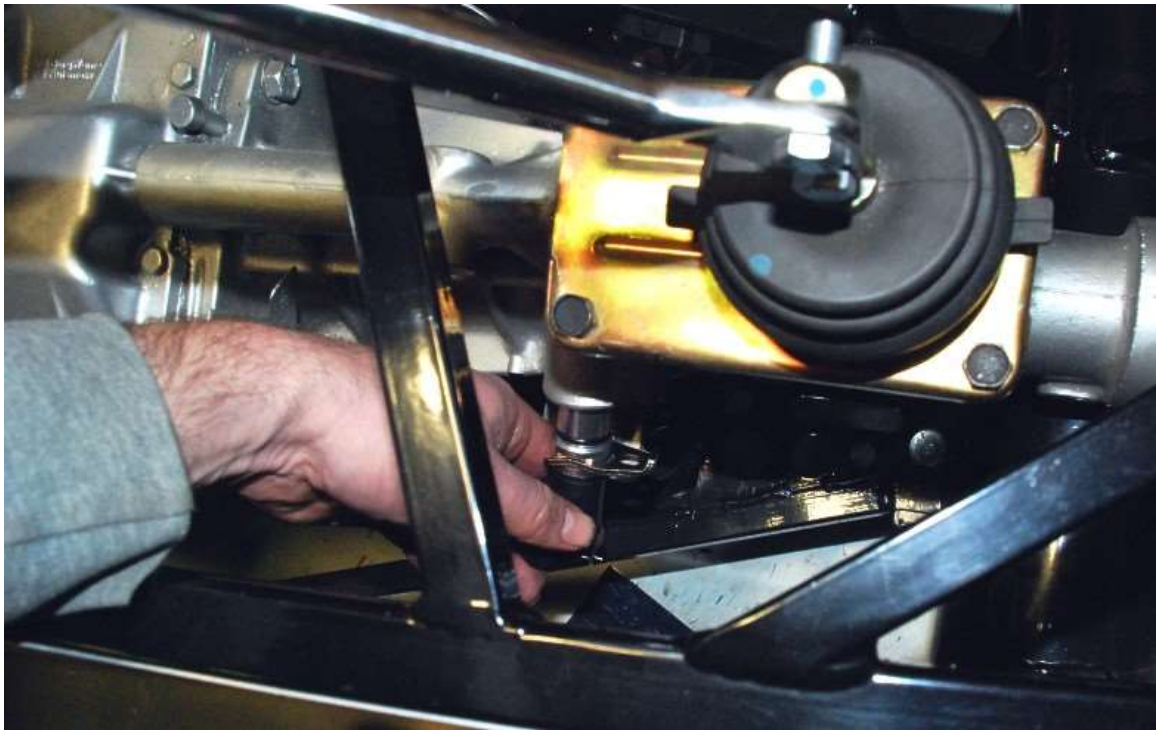

Put a little oil on the O-ring and install the sender in your transmission. Use the original bolt to hold the sending unit in place.

Connect the plug and plug it into the sender. If you are running fuel injection you may also need to send this signal to the computer as well depending on your system.

IRS CV axle Nut

🛠 Impact wrench, 36mm deep socket, Torque wrench.

✋ Wait to torque the axle nut until after the e-brake cables are installed.

Apply the emergency brake.

Use a 36mm deep socket and impact wrench to tighten the CV axle nut until it touches the bearing.

Use a torque wrench to torque to **133Nm (98 lb.-ft) then rotate the nut an additional 45°.**

IRS Driveshaft adapter

- There are two different Driveshaft adapters; one for 2015-17 Automatic transmission cars an all 2018+ center sections which is coated clear zinc. The Driveshaft adapter for 2015-17 manual transmission center sections is coated yellow zinc. The standard one included is the clear zinc adapter.
- Driveshaft adapter, IRS fasteners
- 8mm hex socket, torque wrench, Loctite.

Apply Loctite to the (6) M10 x 25mm socket head screws.

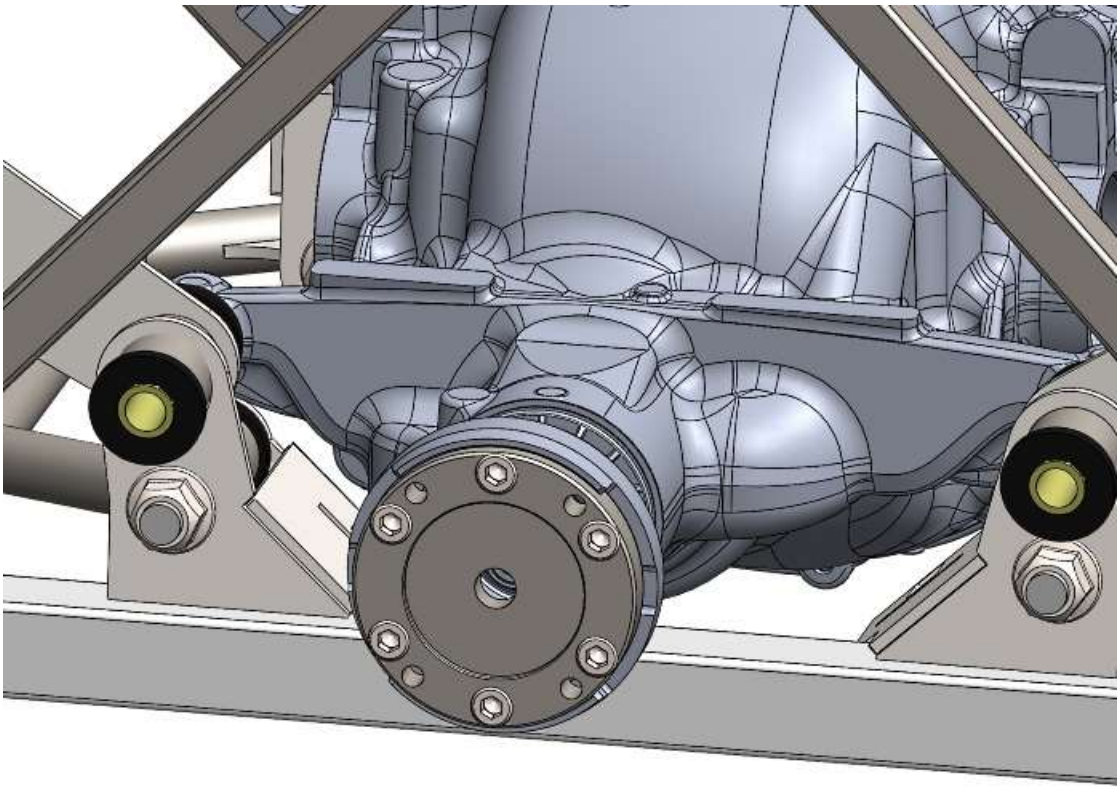

Attach the driveshaft adapter to the center section pinion flange and torque the bolts in a star pattern to **55Nm (41 lb-ft).**

Driveshaft

🛠 14mm wrench, thread locker
🚗 Driveshaft and bolts (Box 23)

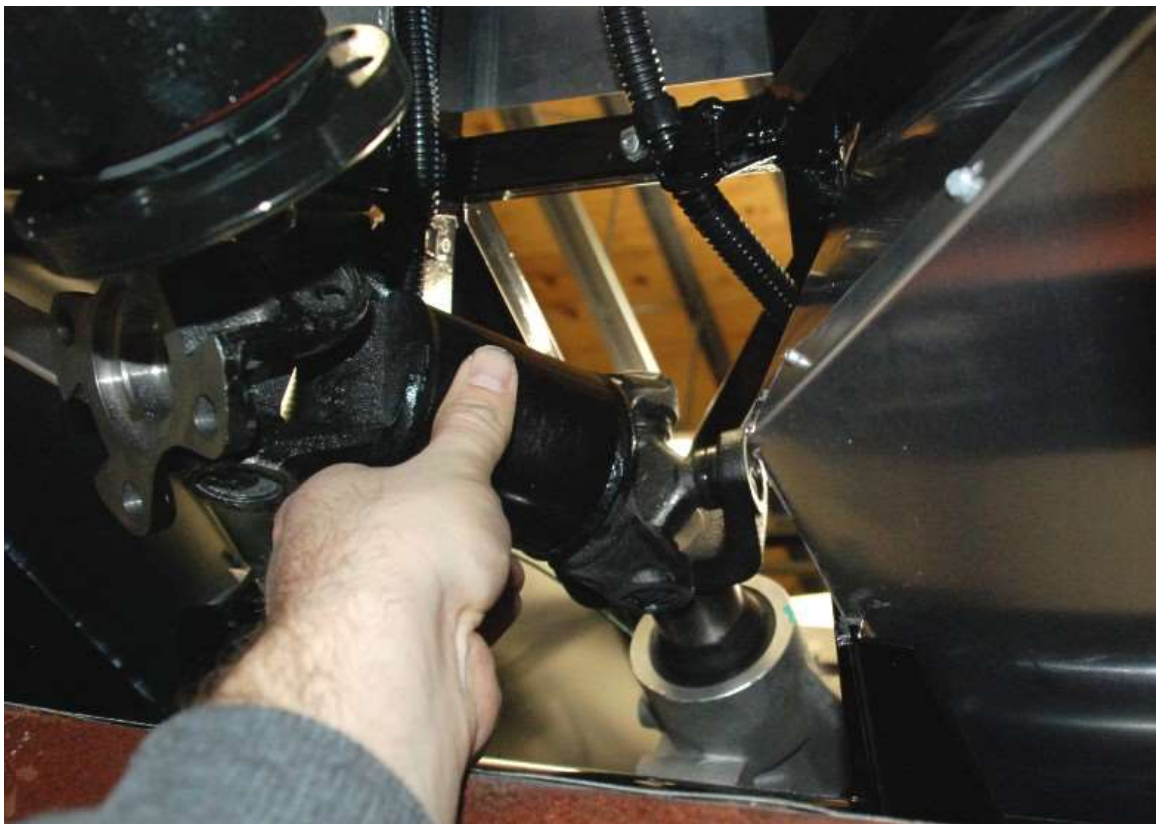

Unpack the driveshaft and slip it up into the rear of the transmission. The most room to do this is usually to hold the shaft just above the center section and come in from the driver's side.

Solid axle

The driveshaft bolts are in the box with the driveshaft and should have thread locker on them already. If thread locker is not there, put a small bead on each bolt.

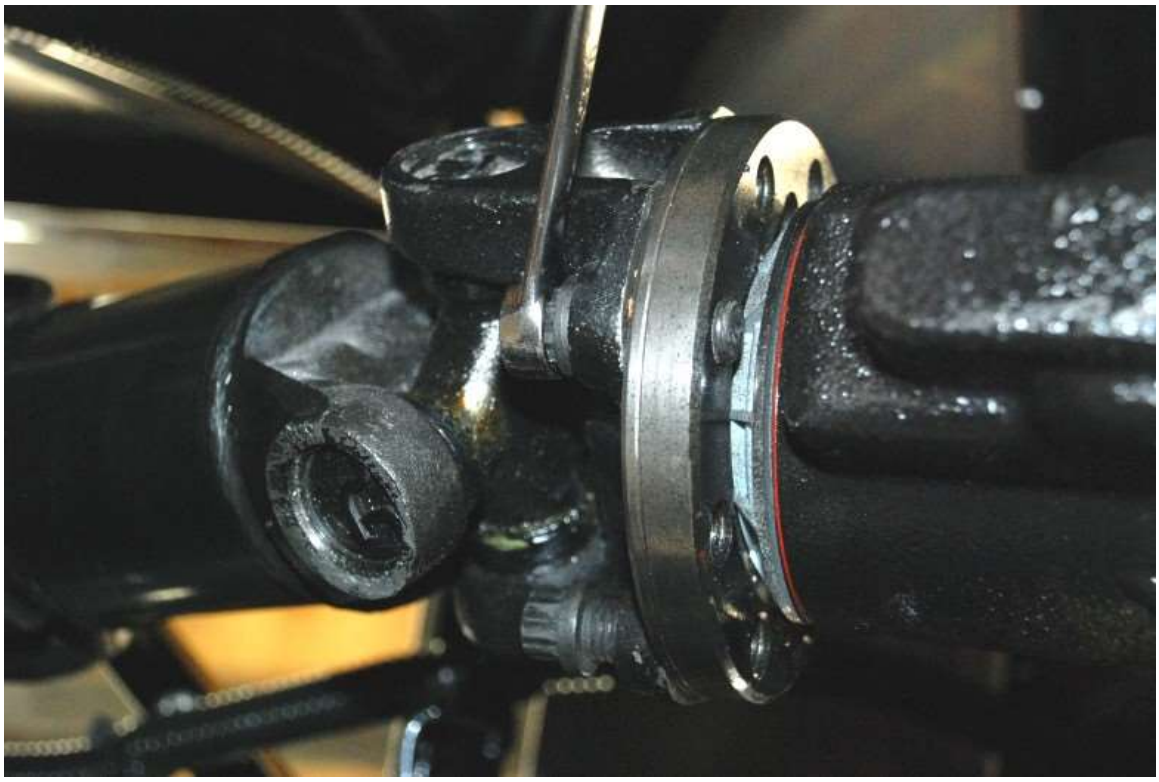

Fit the driveshaft snug against the yoke and install the bolts and tighten. You can put the transmission in gear to stop the driveshaft from turning while you tighten. Torque the bolts to **95Nm (70 lb-ft)**.

IRS

🚘 IRS fasteners M10 x 25mm socket head & M10 x 20mm socket head (Box 2)
🛠 8mm hex socket, torque wrench, Loctite.

Insert the driveshaft into the transmission then align the pinion flange with the rear axle.

Check which bolt length is needed, the M10 x 25mm socket head or the M10 x 20mm socket head depending on the flange thickness. Make sure the bolt goes all the way into the adapter but does not bottom out before tightening.

Bolt the rear flange to the driveshaft adapter and torque the bolts to **95Nm (70 lb-ft).**

Aluminum panels

🛠 Drill, 1/8" drill bit, Silicone, Caulking gun, Rivet gun
🚐 Rivets (Box 4), Packaged Aluminum (Box 10)

Transmission Tunnel rear corners

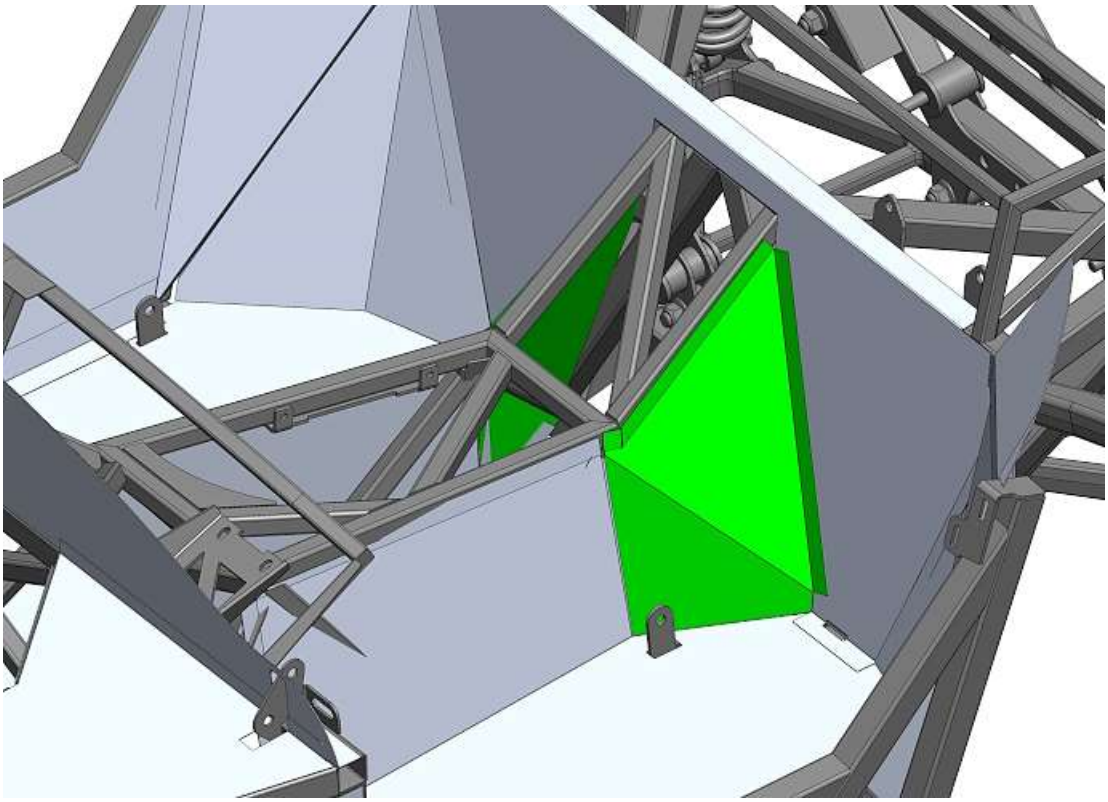

Silicone, mark, drill and rivet the transmission tunnel rear corner aluminum in place.

Transmission Tunnel U-Joint cover

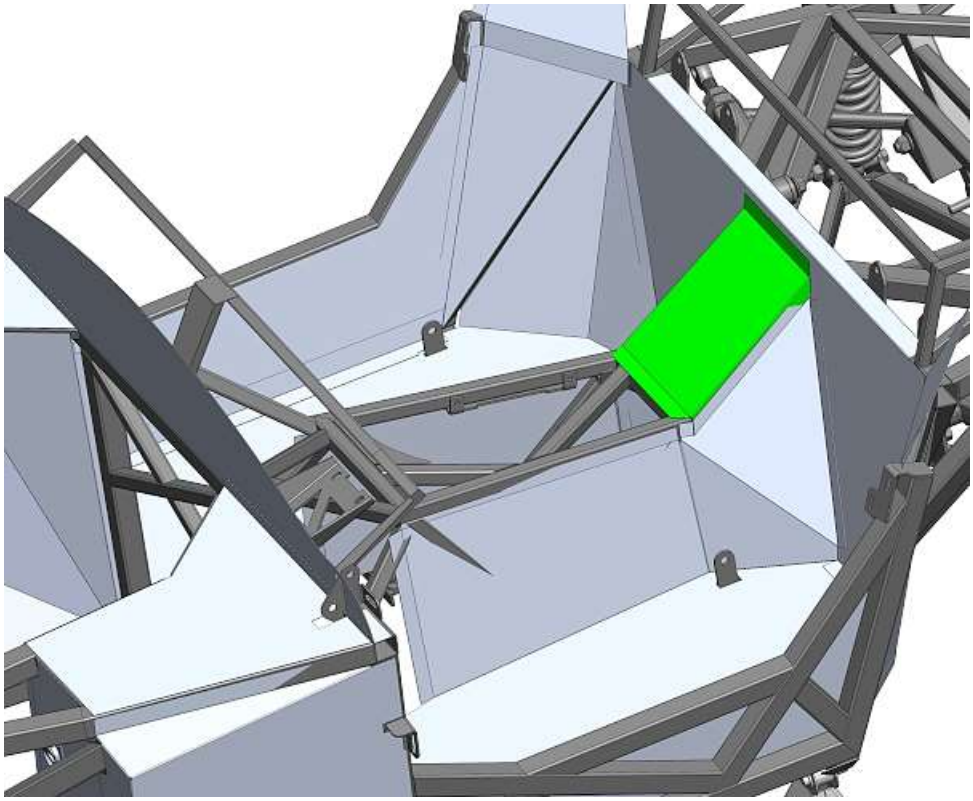

Silicone, mark, drill and rivet the transmission U-joint cover aluminum in place.

Transmission tunnel front corners

If installing a hydraulic clutch, bleed the clutch system before installing these panels, it is easier.

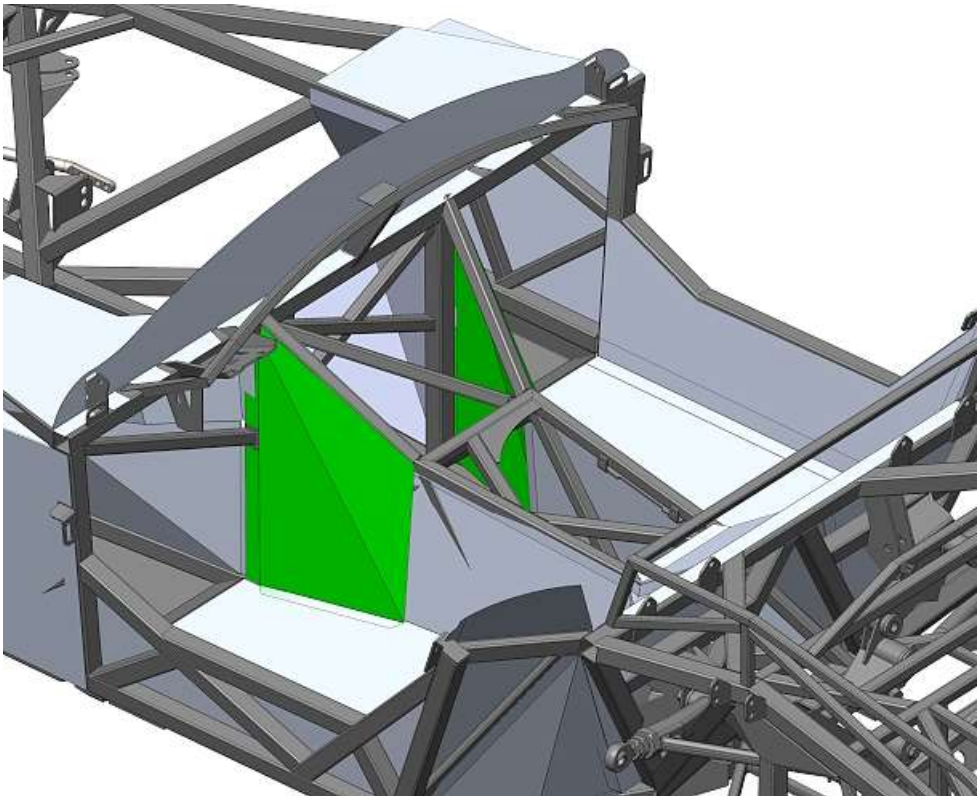

Silicone, mark, drill and rivet the transmission tunnel front corner aluminum in place.

Transmission Tunnel front top cover

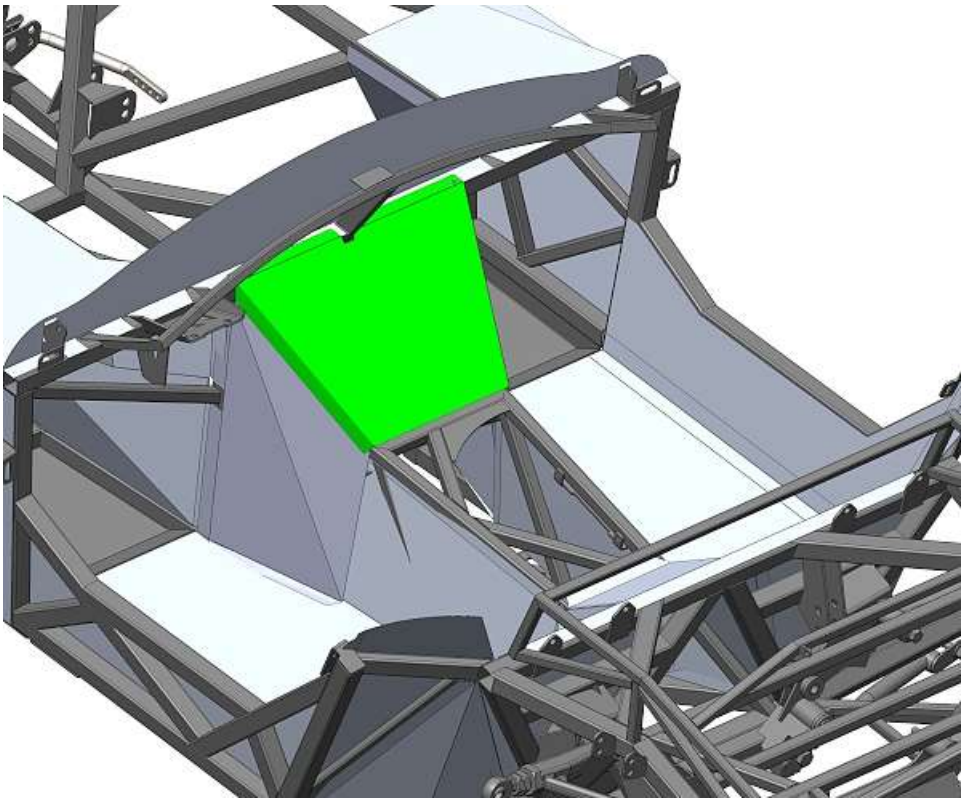

Silicone, mark, drill and rivet the transmission tunnel front top cover aluminum in place.

Transmission Tunnel Cover

Silicone and install the transmission tunnel top.

Silicone and install the shifter hole cover. Make sure it does not interfere with the movement of the shift lever.

Left Footbox Side Aluminum

🛠 1/8" drill bit, drill, rivet gun, caulking gun, silicone
🚗 Mounted aluminum, Rivets (Box 4)
✋ If removing the body for paint, this panel can get installed after sound insulation and carpet are installed in the footbox.

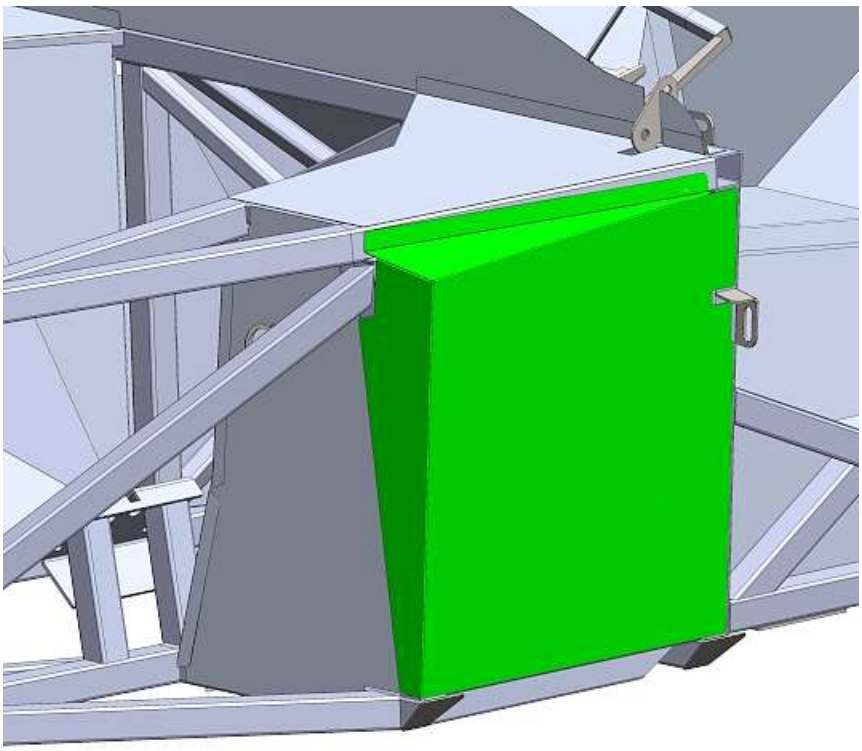

Silicone and install the left footbox outer wall.

Right Footbox Side Aluminum

🛠 $^{1}/_{8}$" drill bit, drill, rivet gun, caulking gun, silicone
🚘 Mounted aluminum, Rivets (Box 4)
✋ If removing the body for paint, this panel can get installed after sound insulation and carpet are installed in the footbox.

Install the A/C before installing the outer panel.

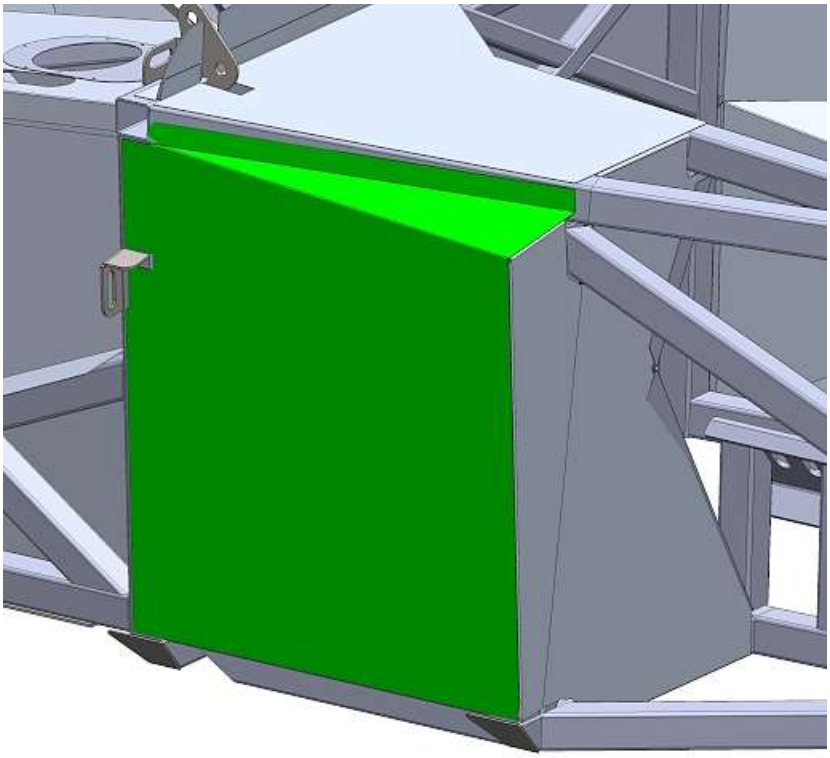

Silicone and install the right footbox outer wall.

Trunk Recess Aluminum

🛠 $^1/_8$" drill bit, drill, rivet gun, caulking gun, silicone
🚘 Mounted aluminum, Rivets (Box 4)

Check the recess opening and move the rear wiring harness to the side of the opening. Tape and add a dab of silicone to hold it in place and prevent rattles.

Check the fit of the aluminum box in the opening to make sure the wiring clears.

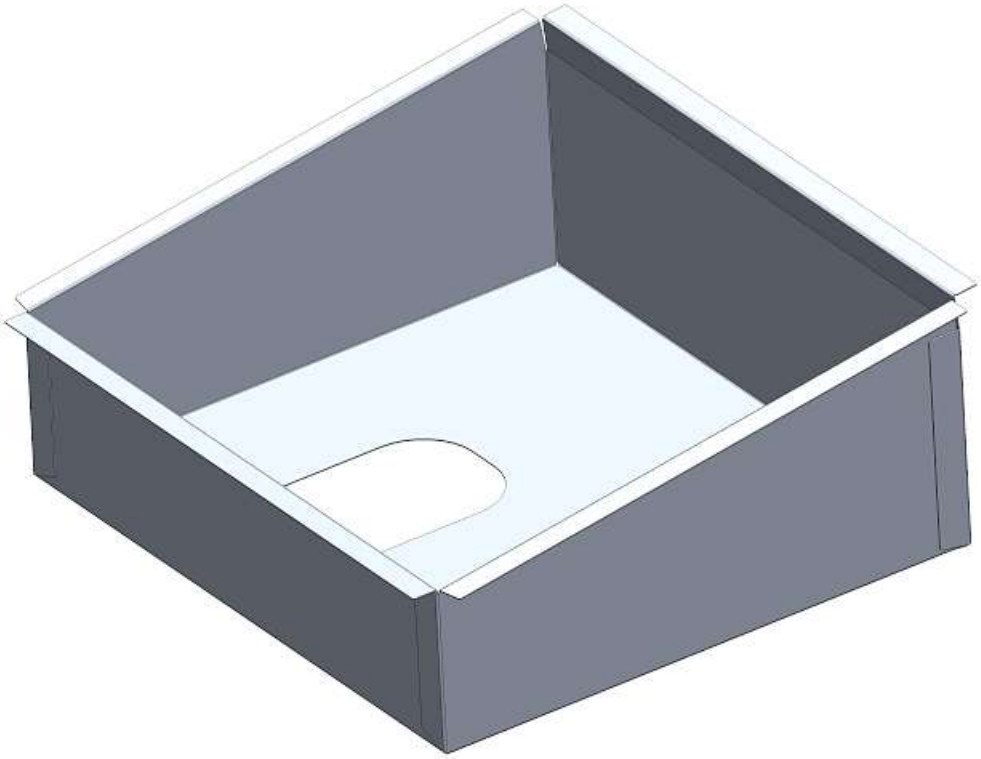

Silicone but do not rivet the aluminum trunk box together.

Silicone around the edge of the recess opening in the trunk.

Insert the box into the trunk area.

Drill and rivet the flange around the trunk then drill and rivet the aluminum box pieces together.

Seats

🛠 $^{5}/_{16}$” drill bit, drill, $^{3}/_{16}$” hex key, ½” deep socket, marker
🚘 Seat mount hardware, seats

Unpack the seats and set them in the cockpit.
Sit in the seats and locate them in the position you are most comfortable. This is a critical fitment so take your time and make sure you are happy with the location.

Lift the bottom of the cushion to reveal the seat frame.

Using the rivet heads as a guide mark where the rails of the seat frame are above the seat mounting plates.

Drill the first hole for the seat mounting and install the bolt.

Drill the remaining holes for mounting the seats and install the bolts.

Nameplate

🛠 $^{1}/_{8}$" drill bit, rivet gun, drill
🚗 Secondary body fasteners, certificate of origin envelope

Factory Five Racing has included a Certificate of Origin along with a Nameplate for your kit. The serial number from the Certificate of Origin matches the number engraved on the 1.50”x 1.50” tube going across the car at the front of the cockpit on the driver side. Below is an example of how the nameplate looks. The VIN number space is provided so that your state issued VIN number can be engraved if you so desire. This can be engraved at any Trophy or mall engraver.

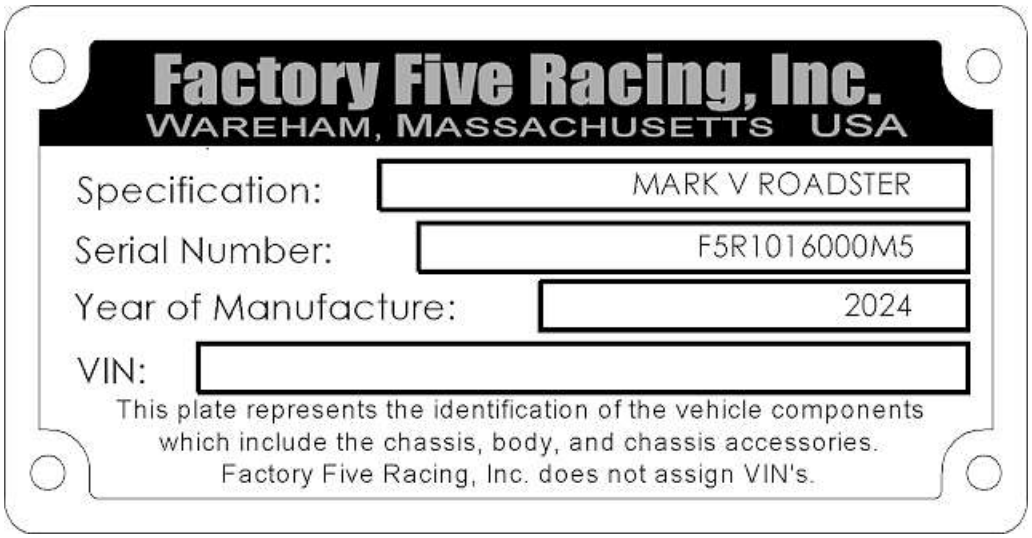

A few places that people have riveted these plates are: front of the 1.50”x 1.50” hoop in the cockpit to the left of the steering shaft; on top of the left footbox; on top of the right footbox

Horns

14mm wrench, wire cutters, wire crimpers, $^{3}/_{8}$” socket, ratchet.

Electrical system components (Box 27)

Make sure the trumpet outlet is pointed down slightly so that they do not fill with water.

Attach one horn to the included bracket using one of the 14mm lock washers and nuts included. Note the orientation of the wire connectors when tightening the bracket so that it will be correct when installed.

Locate the chassis harness horn wires on the front chassis harness and pull the wires back 3” along the harness.

Cut the end of the chassis harness horn ground wire and strip the end of the chassis harness ground wire.

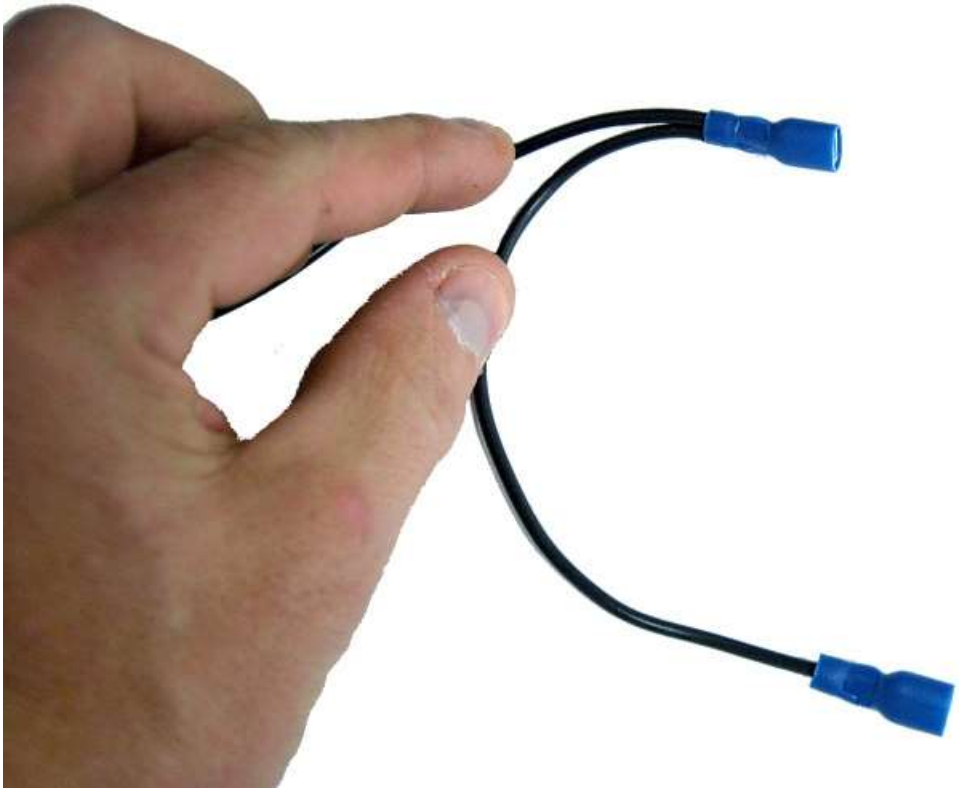

Twist the chassis harness ground wire and a 9” piece of wire together and insert them into one of the ¼” female connectors included then crimp the connector on.

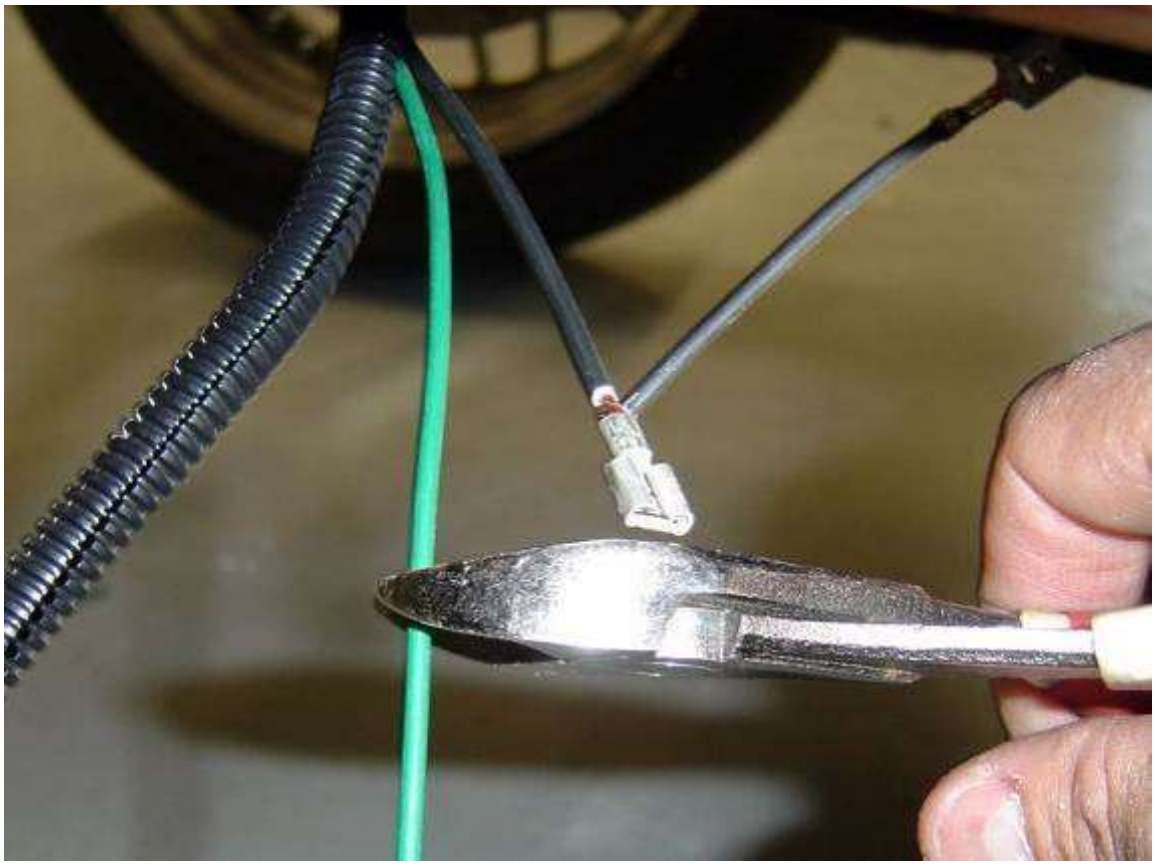

Cut the end of the green horn power wire and strip the ends of both wires.

Twist the chassis harness green wire and a 9” wire ground together and insert them into one of the ¼” female connectors included with the horns then crimp the connector on.

Wires connected with jumpers.

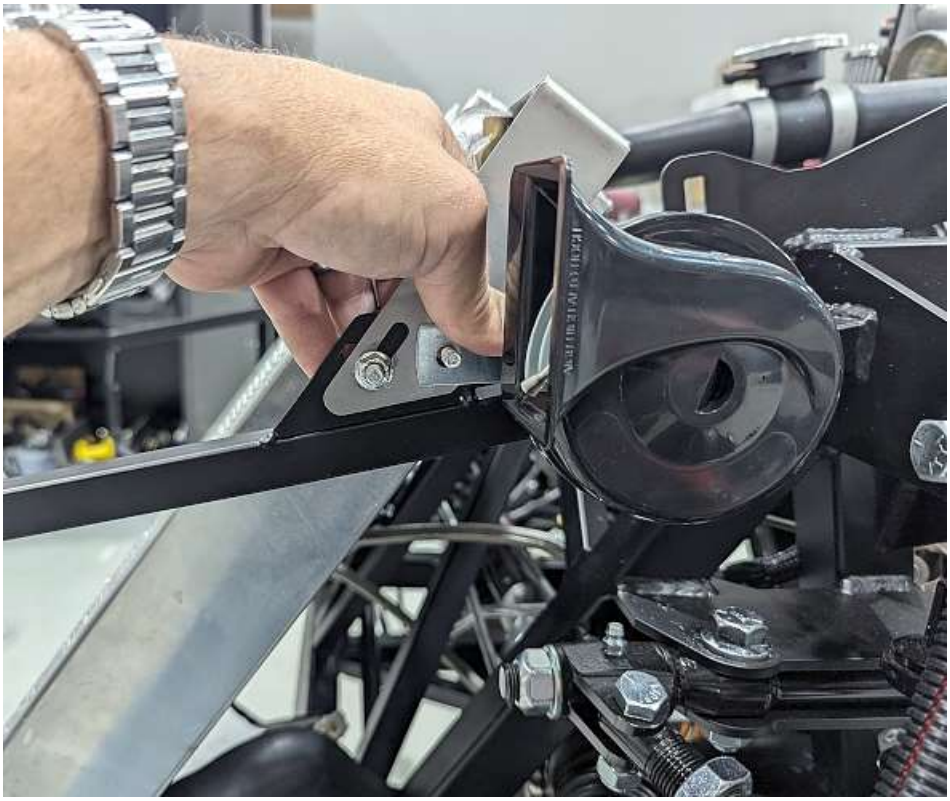

Locate the horn pointed down on the upper radiator mount.

Place the other horn on top of the first horn.

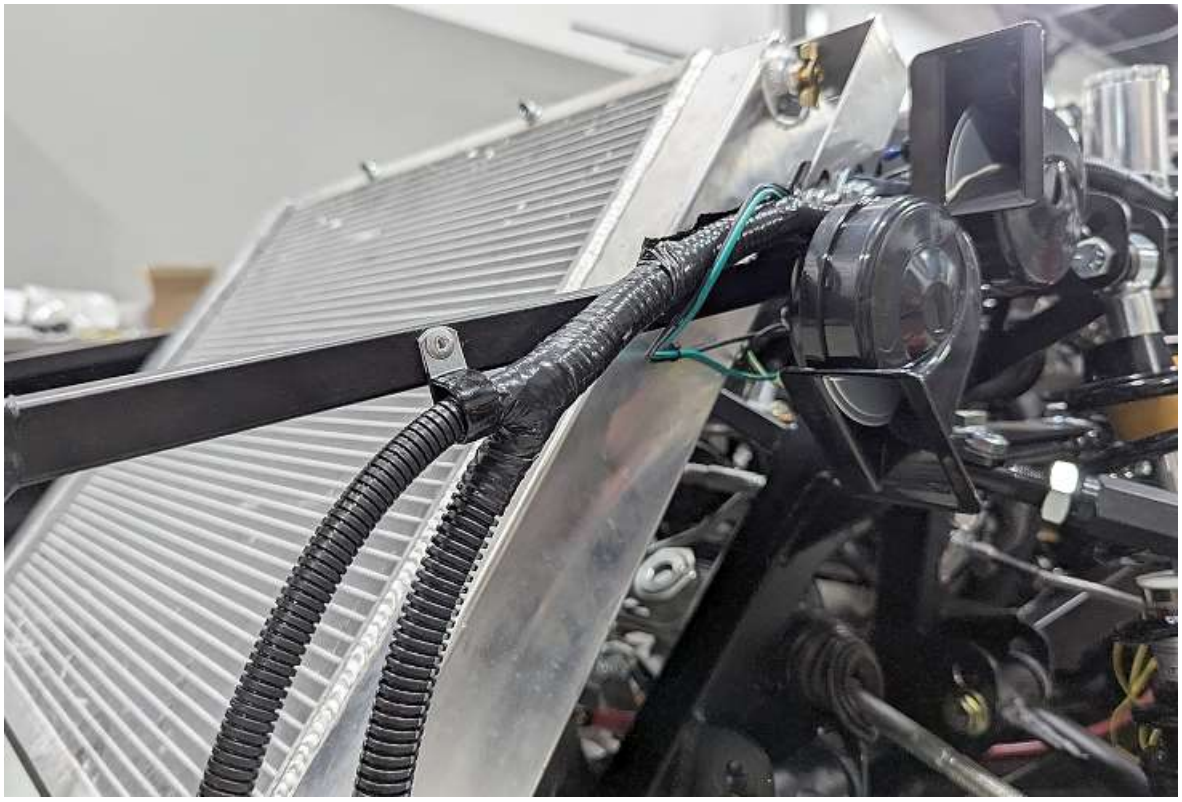

Run the wiring harness over the shock mount and down the radiator mount tube.

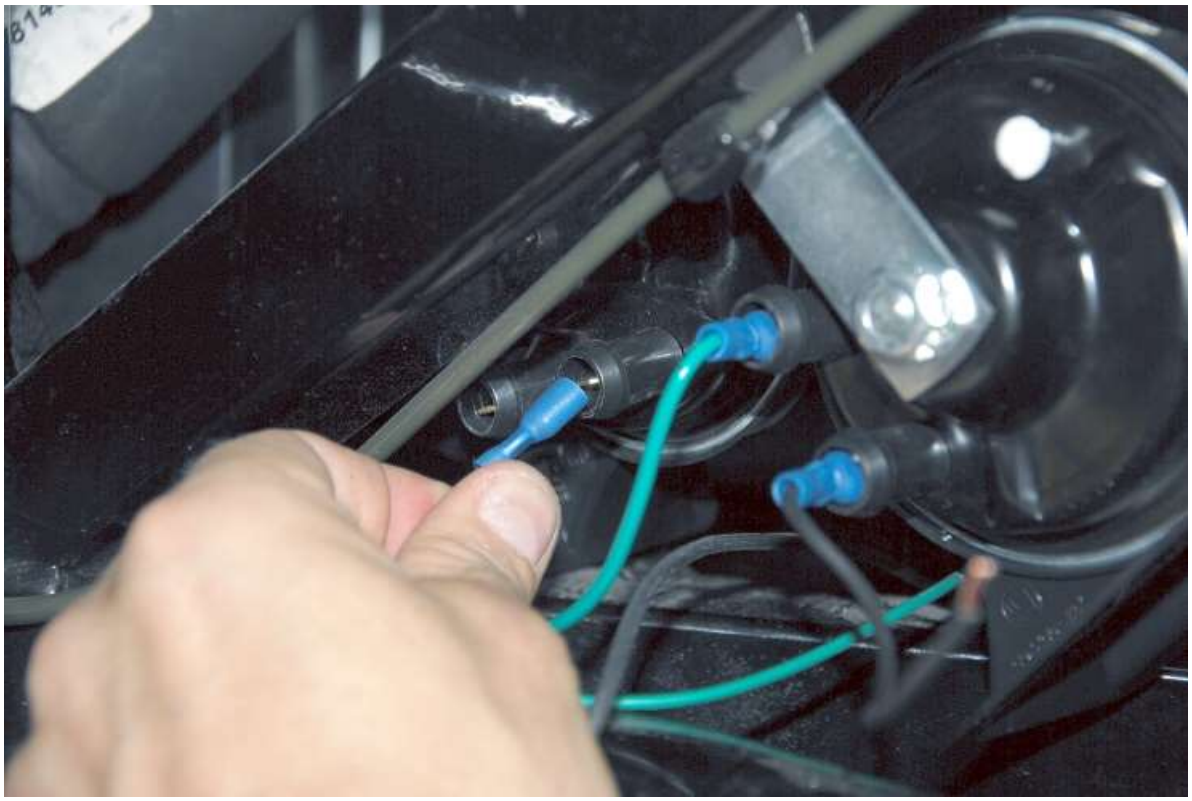

Attach the chassis harness horn wires to one horn and push the jumper wires on to the other horn. Either connector on the horn will work.

Steering Wheel

🛠 Philips head screw driver, 10mm wrench, $^{5}/_{16}$" hex key

🚗 Steering wheel/Hardware, $^{3}/_{8}$"x 1" socket head bolt and washer, (6) M6 x 30mm Philips head screws and locknuts.

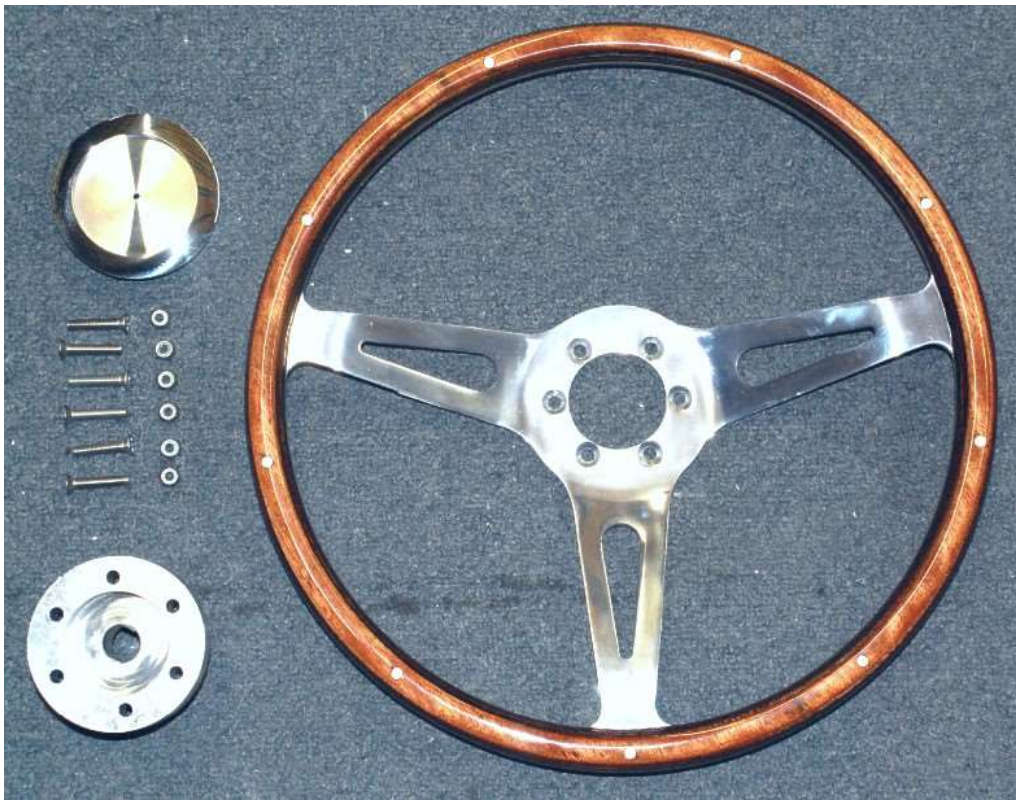

Unpack the steering wheel hardware.

Bolt the steering wheel to the boss using the M6 x 30mm Philips head screws and locknuts. The pattern is not symmetrical so it will only line up one way.

Bolt the steering wheel assembly to the steering shaft using a $^{3}/_{8}$”x 1” socket head bolt and washer. Use thread-locker on this bolt.

Rollbar

🛠 ½” wrench, $^{3}/_{16}$” hex key, $^{1}/_{8}$”, $^{3}/_{16}$”, $^{5}/_{16}$” drill bits, drill.

🚘 Driver side Rollbar Assembly, $^{5}/_{16}$”x 2” button head socket screw and locknuts.

Unpack the rollbar and mounting hardware.

Slide the rear leg of the bar down onto the chassis mount.

Slide the main hoop into the chassis mounts and wiggle or tap with a soft mallet until it lines up with the rear leg.

Slide the rear leg up over the mount on the hoop and make sure it comes all the way up flush. Clamp the rear leg up with a pair of vise grips. The front hoop will angle back.

Rollbar drilling

Put a clamp or vise grips on the rear leg mount holding the leg up against the rollbar hoop.

Step drill the top of the rear leg first using an $^{1}/_{8}$" bit followed by a $^{3}/_{16}$" then a $^{5}/_{16}$" bit.

Insert the bolt through the top rollbar hole.

Repeat the step drilling through the rollbar for both front lower mounts. After drilling each hole, put the bolt in the hole so the rollbar stays in the correct location.

Drill the rear leg lower hole last making sure to drill through the frame mount.

Leave the rollbar on for now.

Trunk Hinge Arms

🛠 ½” wrench, $^{3}/_{16}$” hex key
🚘 Trunk hinge components.

Press the bushings into the hinge arms from either side.

Use the carriage bolts and $^{5}/_{16}$” locknuts to bolt the mounting pads to the arms leaving them just snug so they can be moved without loosening the bolts.

Hang the hinge arms on the chassis using the shoulder bolts.

Trunk gas struts (Optional)

🛠 Drill, $^{3}/_{16}$” drill bit, Rivet tool, ½” wrench, ½” socket, ratchet, marker, small flathead screwdriver

Optional trunk strut kit.
Either end of the gas strut can get attached to the hinge arm.

Screw the ball stud into the hinge arms from the inside of the car out then push the gas strut onto the ball stud.

Attach the gas strut to the ball stud bracket.

Run the gas strut forward as straight as possible so that neither the rod nor the strut body will hit the rollbar. On the left rollbar, it should be to the right of the leg and on the backside of the ¾” tube as shown with the bracket on the bottom.

Mark the left rivet hole on the frame.

On the right side if not running a right rollbar, take the left rollbar and put in on the right side temporarily.

Run the strut forward as straight as possible again so that neither the rod nor the strut body will hit the rollbar then mark the right rivet hole. It should be left of the inside leg and on the backside of the ¾" tube as shown with the bracket on the bottom.

Remove the rollbar.

Remove the rod end ball stud bracket use a small flat head screwdriver to pry up on the metal clip holding the stud in.

Drill the bracket holes marked.
Hold the left bracket up placing a rivet through the left hole into the frame then drill the remaining two holes.
Hold the right bracket up placing a rivet through the right hole into the frame then drill the remaining two holes.
Rivet the brackets to the frame with the stud pointed up.
Leave the gas strut unattached until after the body has been mounted.

Rolling Chassis Check

Front Suspension

Now is a good time to double check all your hardware, make sure your wiring and hoses are away from extreme heat and moving parts, make sure the steering turns freely lock to lock, and make sure your brake flex lines have enough slack for the full range of wheel movement.

Fluid Levels and Grease

🛠 Grease gun, chassis grease, ratchet, rags
🚘 Transmission fluid, rear axle gear oil, engine oil, coolant, water

IRS

Fill the rear differential with gear oil. Any 8.8 in. ford has a fill plug that is removed and filled until the oil just reaches that level. The IRS has it in the rear cover and the solid axle has it in the front.

Transmission

Fill the transmission with fluid and install the shifter. Leave the shift handle and knob off for now.

Engine

Fill the engine with Oil and coolant. Make sure there is some coolant in the overflow to start out, about $^{1}/_{3}$ full is good.

✋ Both these fluids should be rechecked after you have started the engine for the first time.

Suspension

All the suspension and steering components that have grease fitting need to be greased. With a grease gun squeeze grease into each fitting on all the control arms, including rear lowers on a slid axle, and tie rods.

IRS Axle Nuts

🛠 Torque Wrench, 36mm socket
🚘 IRS components

If not done already, have a friend sit in the car and step on the brakes. Torque to **133Nm (98 lb.-ft) then rotate the nut an additional 45°**.

Wheels

Install and torque your wheels to **122 Nm (90 lb-ft)**. Make sure they rotate freely and do not interfere with the brake calipers, lines, or any suspension components.

Rattle Patrol

Review the race car check list in the Appendix.
Get the engine up to temperature and check for leaks and make sure the fan is working.

After running the car for the first time once coolant is added and while the system is still warm, retighten the hose clamps used on the cooling system.

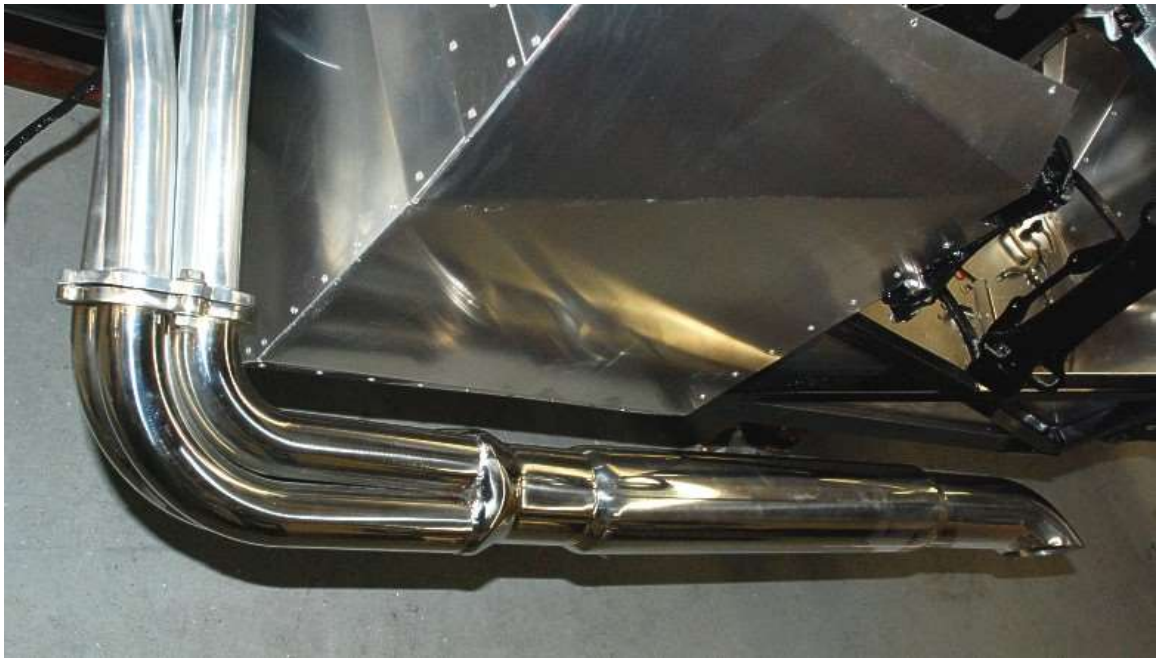

If you need to you can temporarily bolt your side-pipes in place to keep things quieter.

If you have the space in your driveway or have access to a small parking lot it is very helpful to drive the chassis around a little to make sure everything is working before you seal it all up.

If you do this, bolt the seat harnesses in and use them

You will be very surprised at how quickly the car responds to small inputs and it is amplified by being extra light without the body in place. Things to check for:

- Any leaks – brake fluid – transmission fluid – engine oil – rear diff fluid – coolant
- Wiring – loose wires – close to heat sources or moving parts – loose grounds
- Suspension – all hardware tight – no binding or clearance issues
- Chassis – all hardware double checked – nothing loose or sharp
- Steering – all set screws tight – steering wheel tight – tie rods and rack tight
- Brakes – plenty of fluid – pedal not bottoming- all fittings tight to reservoir
- Dash – All gauges working - Gauge lights work – indicators and switches working
- Brake Bias – if you have space adjust your brakes bias with the balance bar (the set up and adjustment procedure is detailed in the paperwork that came with the pedal-box) Set up your brakes so that the fronts lock up just before the rears.

Footbox Fitment

One of the most important things you can do to make sure you enjoy your car is to make sure the fit and comfort of the cockpit is right for you. While you still have easy access to the footboxes is the best time to do this. Set the brake pedal height by screwing the pushrods in or out of the master cylinders, because of the pedal pivot location a small adjustment will make a large difference. Set the pedal height of the clutch with the stop and cable adjuster, usually about ½” above the brake pedal. Make sure that your feet are comfortable on the pedals and you can press them all without hitting the others. You can also

move the steering wheel in and out to get your arms at a comfortable angle until the set screw is tightened.
If you just cannot get comfortable with the standard configuration some things you can do to increase room or comfort include:

- Trim the pedal pads for more room between pedals.
- Add a dead pedal to the outside footbox wall at clutch pedal height.
- Use a smaller steering wheel.
- Different shoes can make a large difference in foot room.

Your rolling chassis is now complete!

Chapter 4

Body Section

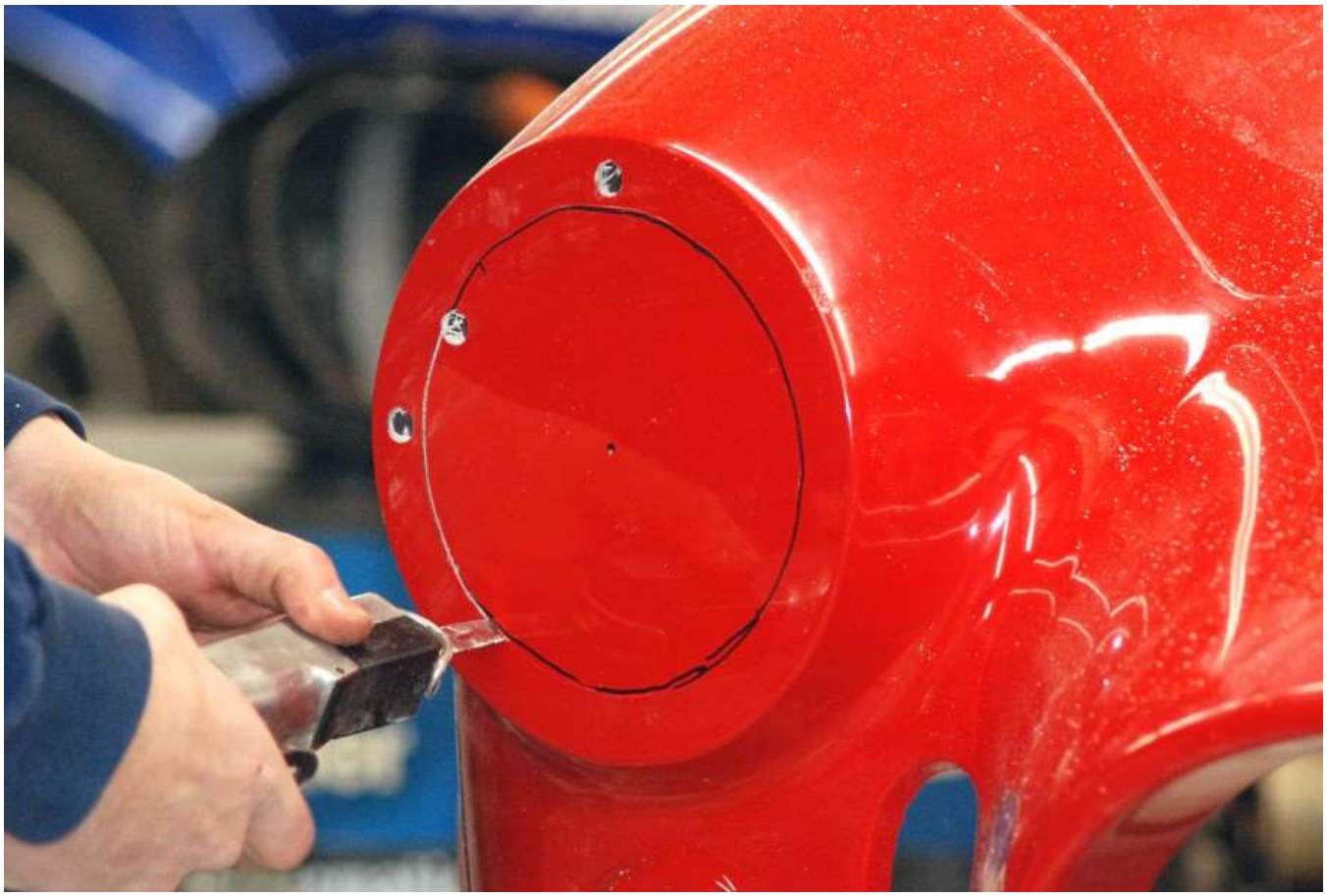

The Body and panel mounting are a critical part of how your car will end up looking when it is finished. Whether you are having a body shop paint your car or doing it yourself, the best results will be from fully mounting the body, all the panels and getting them to fit properly and then removing the body for the paint process. If you are not doing any of the body work yourself this means for best results, the entire car should go to the body shop for panel fitting, in this case, you should take extra precautions to tape/protect/remove anything that you do not want paint or primer on. All the panels have been trimmed oversized so they will need material removed for a perfect fit. The easiest method for getting the best fit is to sand or trim the panel edges just enough so they will sit down in the openings, then fully mount them with hinges and latches. Once the surfaces are all matched between panels and the body then trim away the edges until the gaps are all even and slightly larger than you want them on the finished car. The paint will fill in from both sides and tighten the gaps so we usually run about 3/16" of gap prior to painting. If you are planning on stripes, it is also best to line them up with the body and all panels mounted.

Frame prep (Weatherstrip)

- Tin snips, razor knife
- Secondary body fasteners
- To ensure that the body is in its proper location, the weather stripping should be installed on both the frame and the firewall even if you are just test fitting the panels.
-
- Remove the rollbar from the frame.

Locate the press on bulb seal (part #10761) from the secondary body fasteners assembly.

The push-on weather strip goes across the top of the firewall and around the windshield mounts.

The push-on weather strip goes across the top of the trunk walls and rear floor.

Mounting the Body

Rear Quick Jacks

- ⅝” wrench, ⅝” socket, ratchet
- Quick jack bumper components
- The main locating points for the body are the rear quick jack mounts; these will set the body in the correct position front to back as well as locating the rear half up and down and side to side.
- When bolting the body down the first time to do the fitment you can leave the quick jacks off and only use the hardware, this makes it easier to maneuver around and safer when crawling out from under the car.

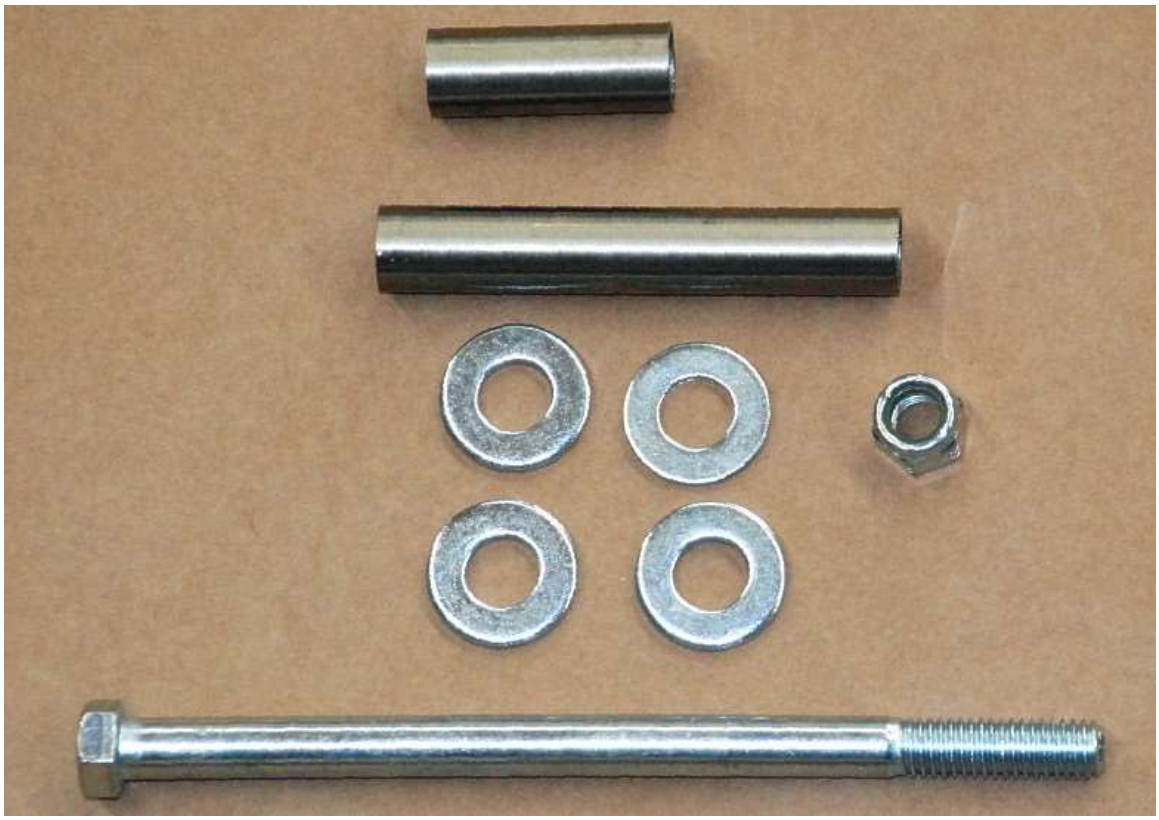

Find the quick Jack hardware that came mounted on the chassis.

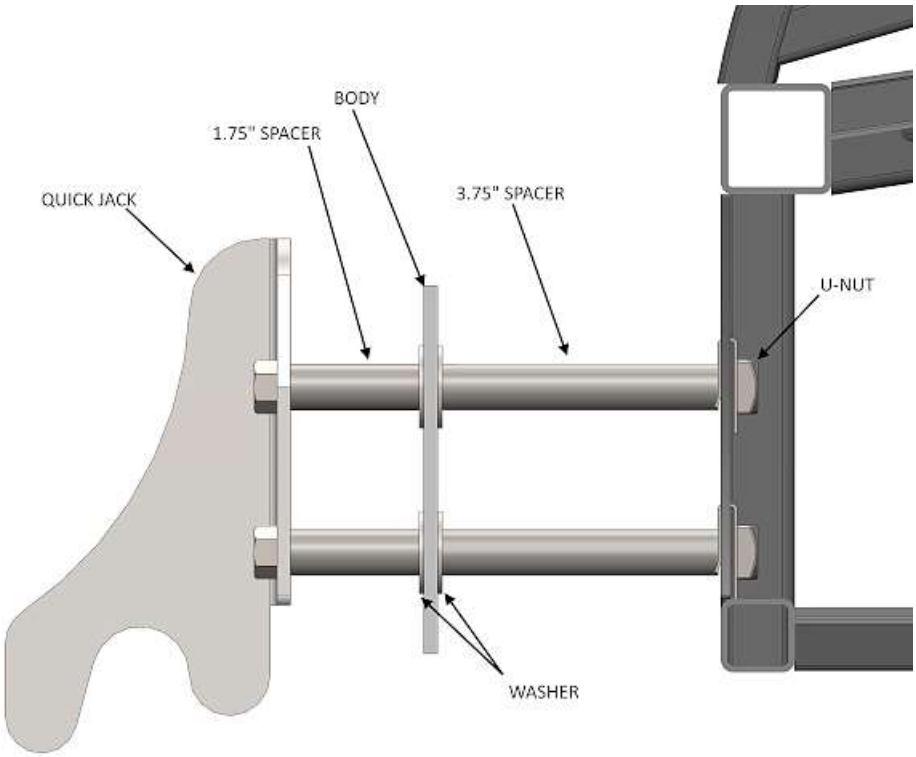

The long sleeves go between the body and chassis with washers on both ends of all sleeves.

The bolt uses a ⅝” socket to attach the rear quick jack bolts to the frame U-nut and body.

Even with the quick jacks removed, it is still a good idea to wrap the bolts with some rags and duct-tape to save yourself from painful cuts or bruises.

Side mounts

- Fastener pack (Box 1) ¼”x 0.75” black button head screws and lock nuts.

Use a jack or clamp to temporarily hold the bottom side of the body up to the frame so that the side mount is against the body as shown.

Check the outside corners of the dash tube. Make sure there is a small gap between the body and frame. Try pushing down on the body here, it should move.

If the tube touches it will affect the door front corner fitment. Use an adjustable or ¾” wrench to bend the tube down a bit, it will go easily the tubing has a thin wall.

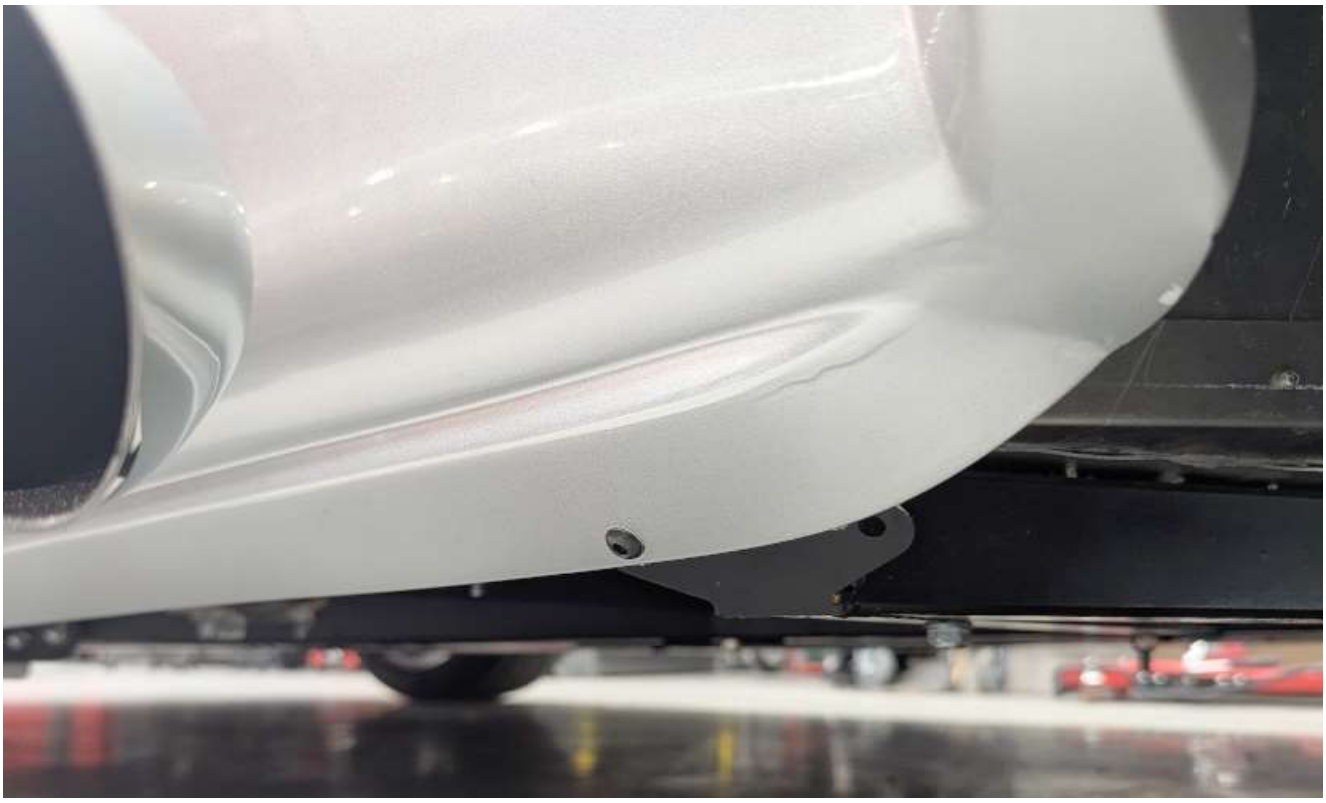

Drill ¼” holes through the body and frame side mounts then use ¼”x 0.75” black button head screws and locknuts.

Front mounts

🛠 $^{5}/_{32}$” Hex key, ½” socket, ratchet, clamps, ¼” drill bit, drill.

🚘 Fastener pack (Box 1) (3) ¼” x 2.00” Button head screws, washers, and locknuts.

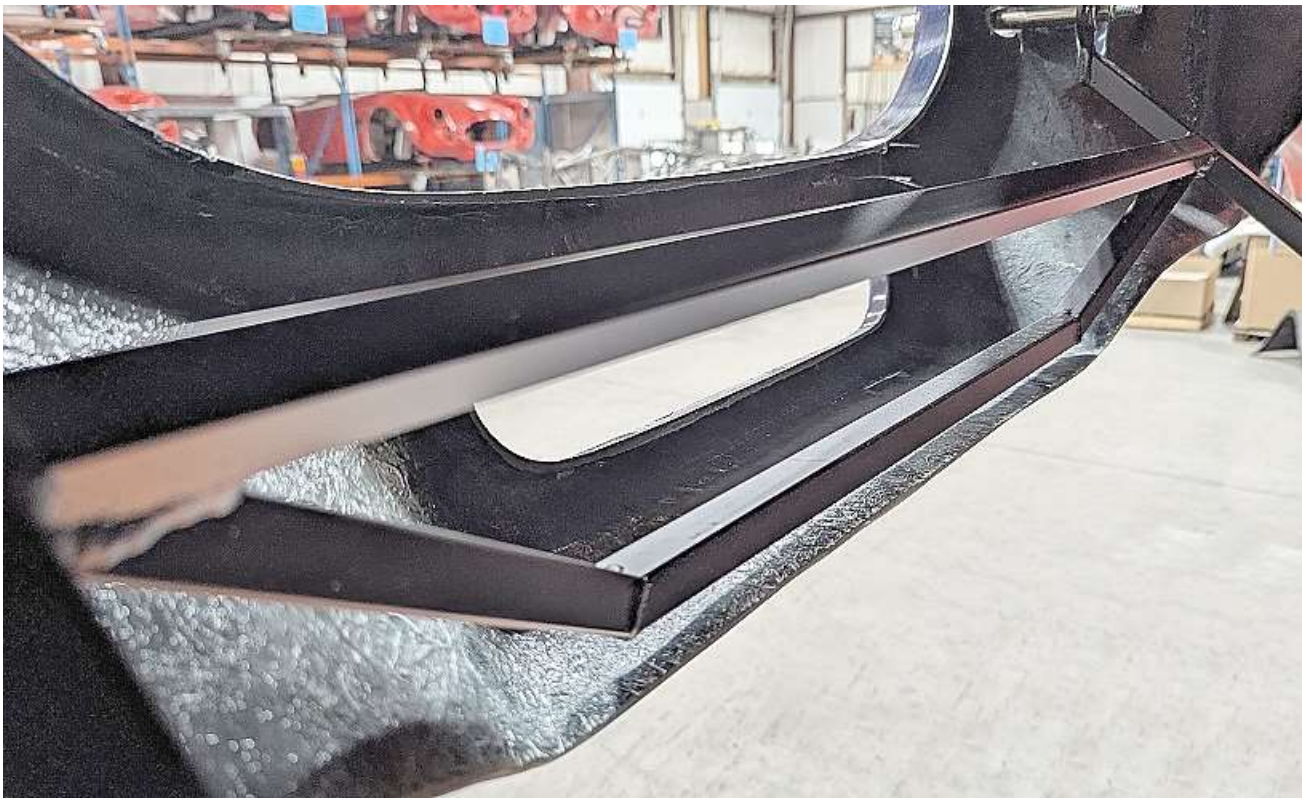

Looking through the lower oil cooler mount, lift the body so that it touches the mount tube then center the body over the frame and clamp the body to the tube.

Use a tape measure to measure from the lip of the front wheel to the rear mounting plate of the front coil-over bracket. Check the alignment to make sure the tape measure is going straight across the car by lining it up with the front shock plate so that the tape measure is parallel. Make this measurement on each side of the body so that the front of the body is centered over the frame.

Move the front of the body as necessary.

With the Body centered left to right drill three ¼” holes up through the bottom of the nose and the mounting tube then use three ¼” x 2.00” button head screws, washers, and locknuts.

Hood

Fitment and bumpers

🛠 Orbital sander, air saw, $^{1}/_{8}$” drill bit, drill, rivet gun
🚘 Hood, Secondary body fasteners

The hood has been trimmed slightly oversized to allow the panel gaps to be sanded down to fit. Set the hood in place and make sure it will fit the opening in the body, if needed sand or file the edges to allow the panel to just fit with a very small gap all around.

✋ The bumpers are used to get the hood to the correct plane with the body, you can shave small amounts off either or put washers as shims to fine tune as needed.

Put the small bumpers around the edge of the hood opening and try closing the hood. If it is too low try the large bumpers.

Use $^{1}/_{8}$" long rivets to attach the bumpers through the body and into the frame.

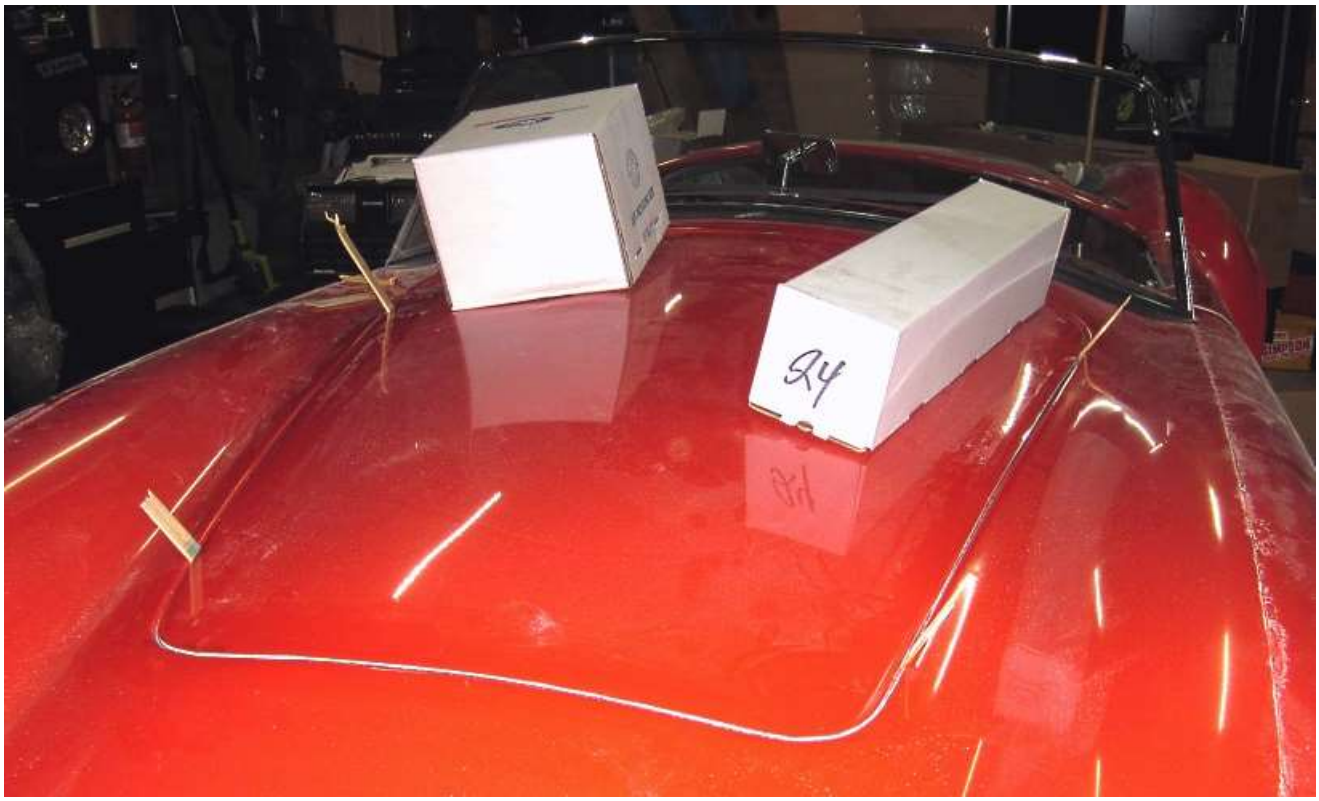

Once you are happy with the alignment you can set the panel gap and radius the edges. Place a couple of heavy objects like an alternator or driveshaft on the hood so that it will not move around then center the hood by eye. An easy way to set the gap is by using a marker. Run a marker around the edge of the panel so that it rubs the body lip all the way around. This will leave a line on the panel that may be thicker or thinner in areas.

Sand, grind, or cut the panel back so the marker line cannot be seen. Remount the panel and the resulting gap should be the same around the whole panel, about $^{3}/_{16}$".

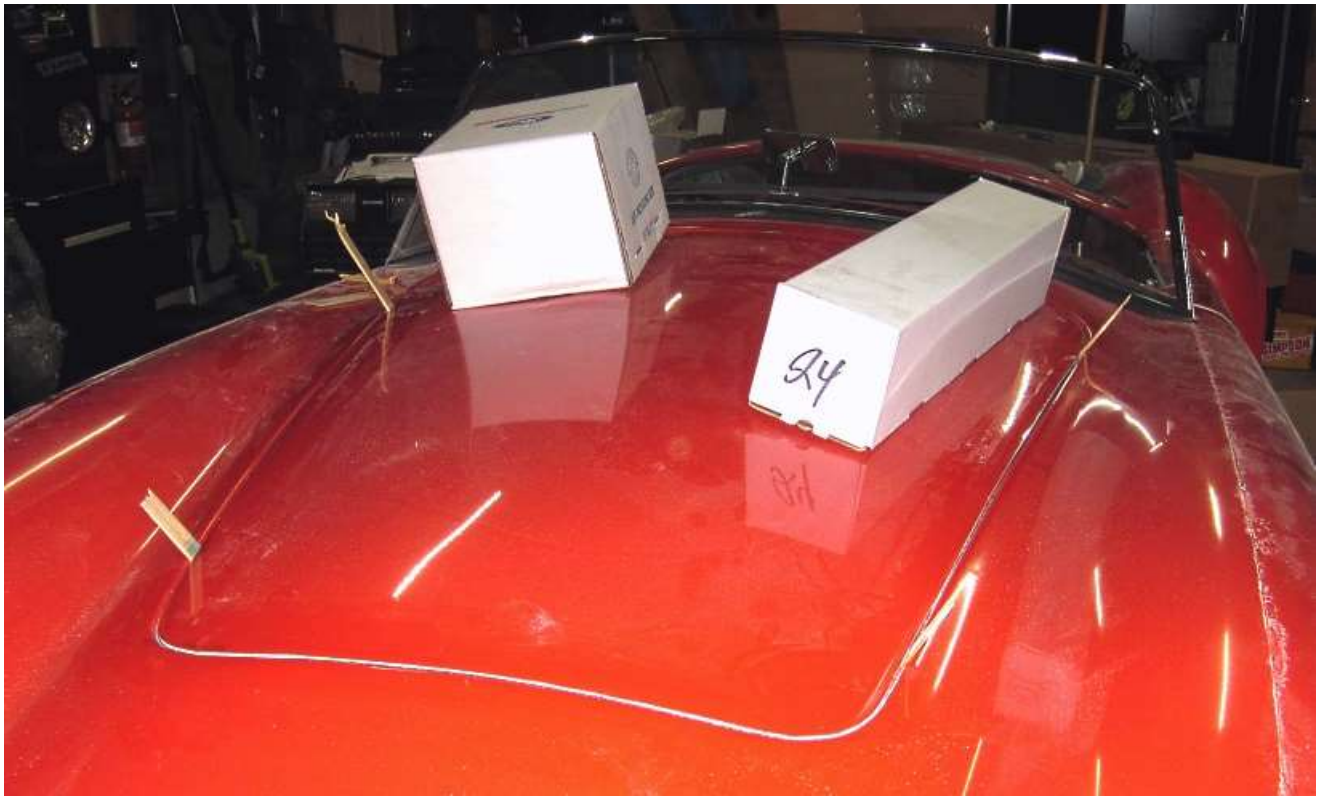

Use paint sticks around the edge to check the gap.

Repeat this gap procedure later after mounting the doors and the trunk.

Hood Hinge

🛠 $^{3}/_{16}$" Drill bit, drill, measuring tape, rivet gun, marker, $^{3}/_{16}$" hex key, ½" wrench
🚘 Hood hinge

ITEM NO.	PART NUMBER	DESCRIPTION	QTY.
1	13451	13451 - LFT FRAME ADJUSTMENT PLATE	1
2	17651	17651 - LEFT ARM SUPPORT PLATE	1
3	15144	15144- RIGHT SIDE LONG ARM	1
4	13946	HOOD MOUNT PLATE	2
5	15143	15143- LEFT SIDE LONG ARM	1
6	13183	BRONZE FLANGE BEARING	8
7	25410	SHORT ARM, (R,L)	2
8	25562	SCREW, CARRIAGE, ZINC, 5/16"-18 x 3/4"	8
9	13325	0.50" SHOULDER BOLT	8
10	13963	5/16-18 NYLON INSERT LOCKNUT	6
11	34526	5/16"-18 FLANGED NYLON LOCK NUT	12
12	13469	THREADED BALL STUD	2
13	14007	GAS SPRING	2
14	15631	3/8" WAVE WASHER	8
15	11005	5/16" WASHER	10
16	14006	14006 - RT FRAME ADJUSTMENT PLATE	1
17	17652	17652 - RIGHT ARM SUPPORT PLATE	1

REVISIONS			
REV.	DESCRIPTION	DATE	APPROVED
A	INITIAL RELEASE	9/4/24	

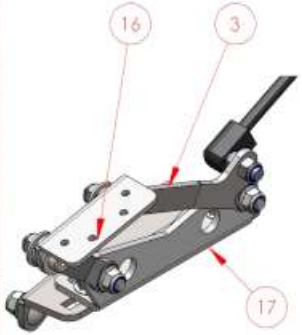

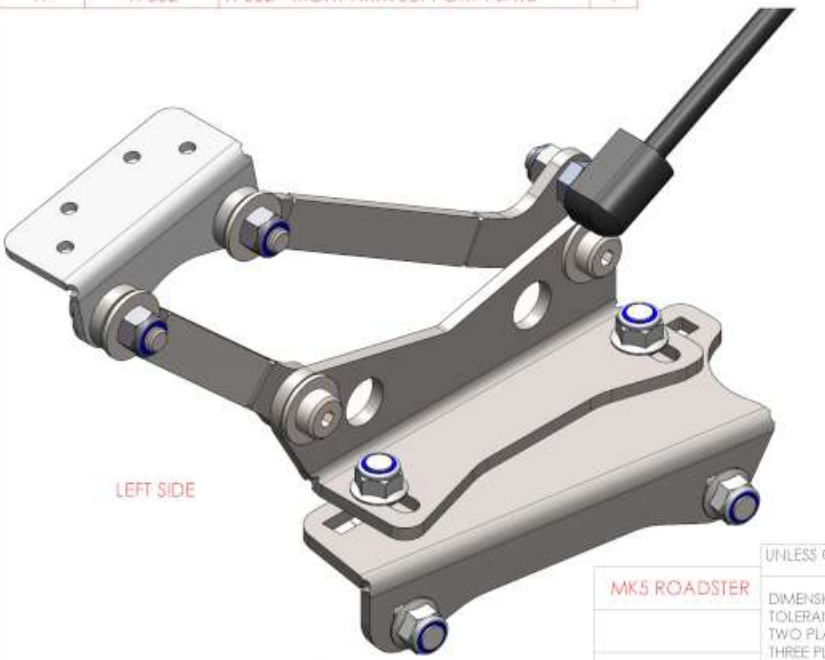

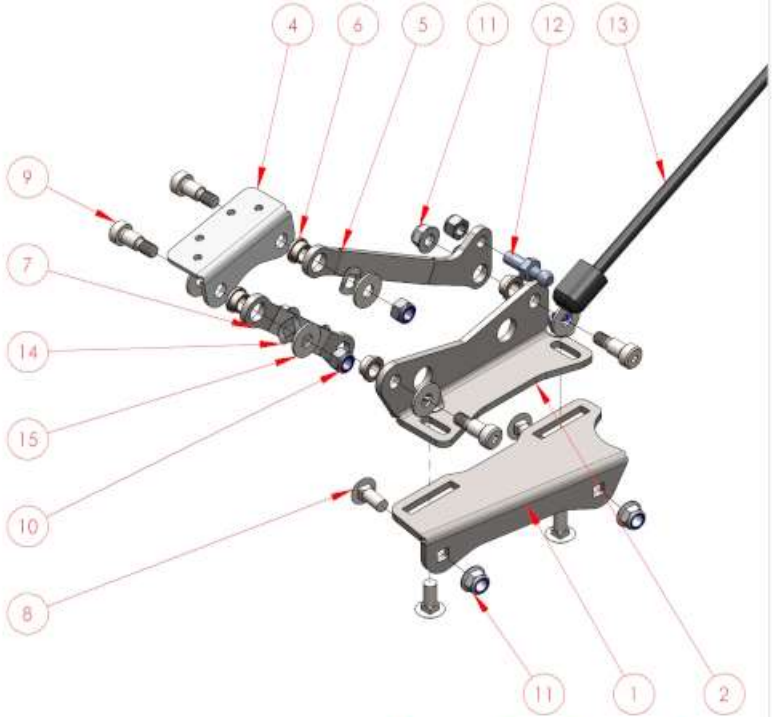

PROPRIETARY AND CONFIDENTIAL
THE INFORMATION CONTAINED IN THIS DRAWING IS THE SOLE PROPERTY OF FACTORY FIVE RACING, INC. ANY REPRODUCTION IN PART OR AS A WHOLE WITHOUT THE WRITTEN PERMISSION OF FACTORY FIVE RACING, INC. IS PROHIBITED.

MK5 ROADSTER

UNLESS OTHERWISE SPECIFIED:
DIMENSIONS ARE IN INCHES
TOLERANCES:
TWO PLACE DECIMAL ±0.01
THREE PLACE DECIMAL ±0.005
FOUR PLACE DECIMAL ±0.001

MATERIAL

FINISH

USED ON

APPLICATION

	NAME	DATE
DRAWN	JI	8/30/24

COMMENTS:

PRINTED 12/16/2024

Factory Five Racing, Inc.

TITLE:

Mk5 HOOD HINGE

SIZE	DWG. NO.	REV
A	17649	A

SCALE: 1:4 | WEIGHT: | SHEET 1 OF 1

The hood hinge pivot mounts attach to the hood using rivets, the holes are predrilled in the hood liner but you may need to clean them out with a $^{3}/_{16}$" drill bit. This is the initial install so you only need a few rivets if you are going to remove the hinge brackets prior to body painting (recommended).

Install the ball pivots for the hood struts on the hood using $^{3}/_{16}$" rivets. The ball points toward the inside of the car.

Press the bronze bushings into the holes in the hinge arms as shown. The short hinge arms are both the same. Left side long arm shown.

Right side long arm with bushings pressed in

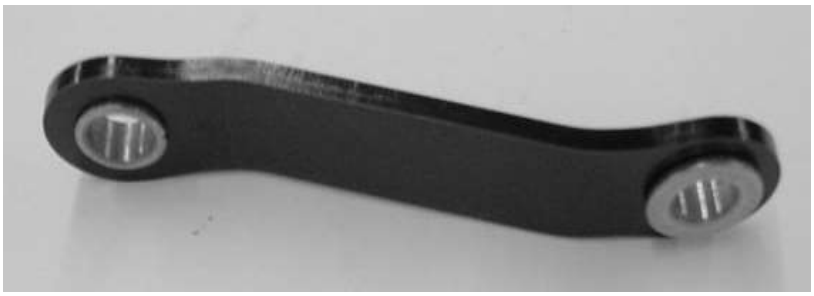

Short arm with bushings pressed in.

Attach the hinge arms to the arm support plate as shown on the following pages using the ⅜” shoulder bolts, wave washers, washers, and nylon lock nuts. The flange of the bronze bushings should contact the arm plate. Tighten the nuts against the shoulder bolt shoulder. The spring washer will set the preload on the arms.

✋ Use the thin stainless washers on the underside of the arm support plate

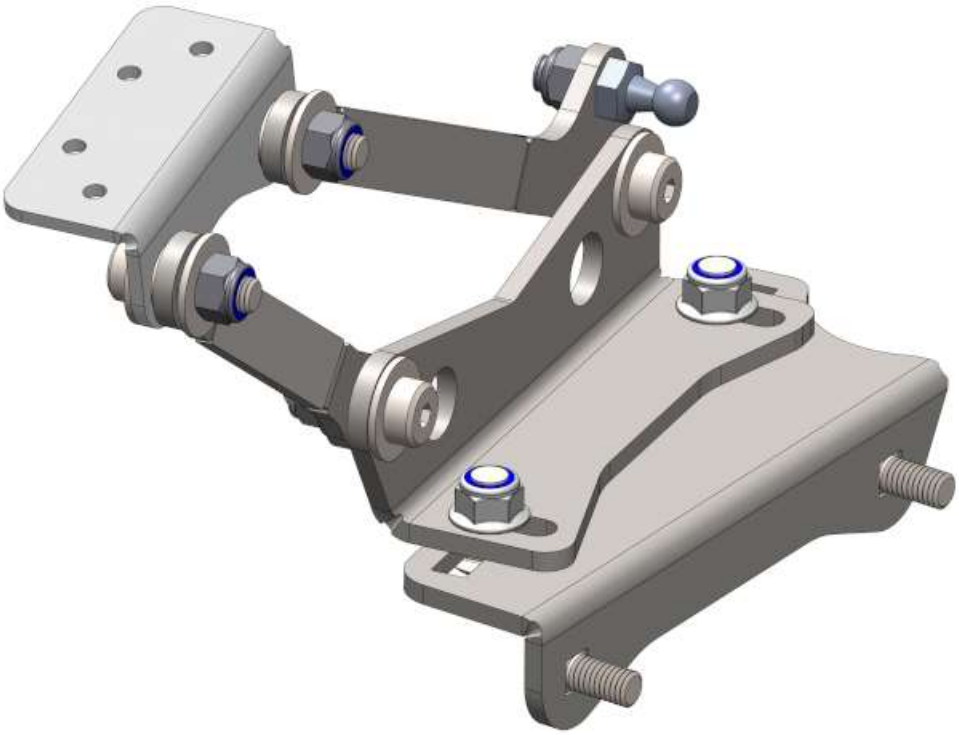

Left side shown

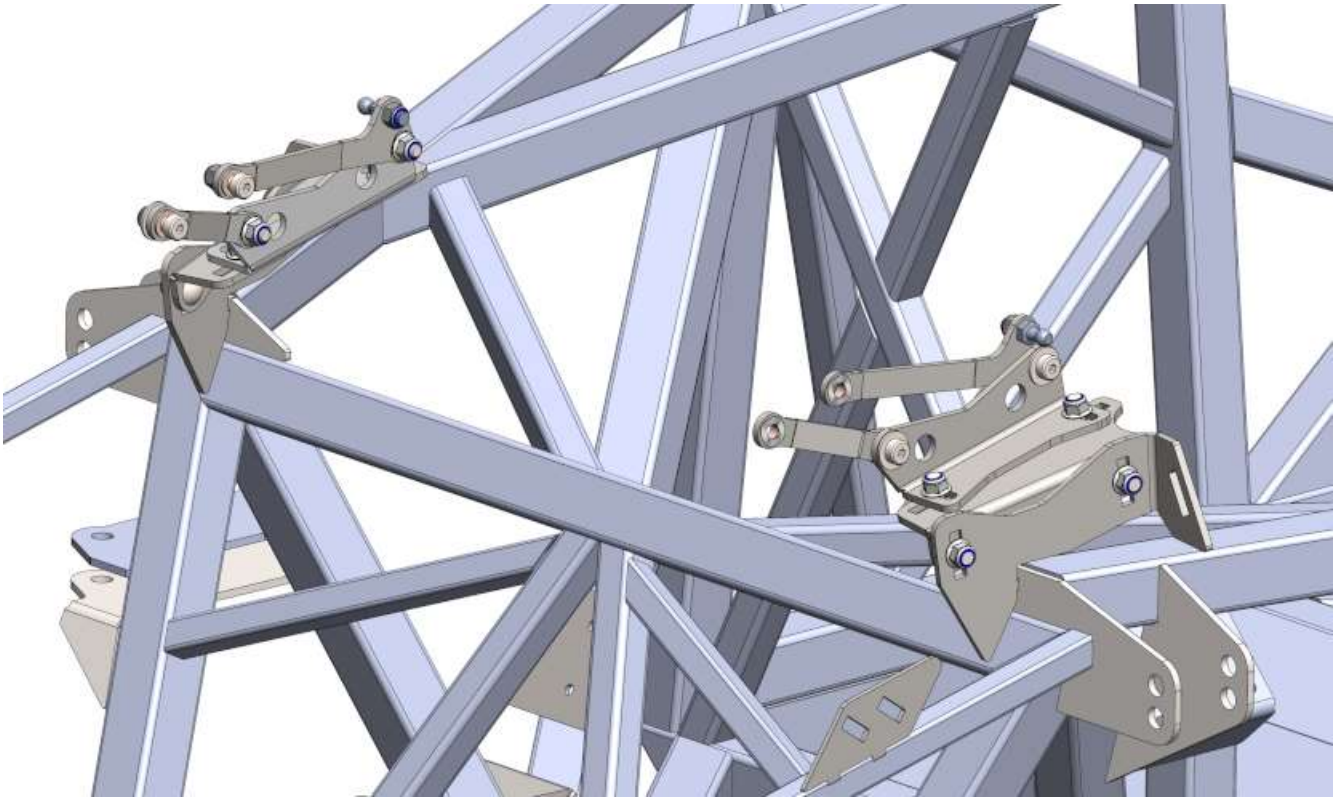

Attach the hinges to the chassis using the carriage bolts from the inside out.

Leave the bolts loose enough so that the hinge assembly can be positioned to match the hood.

Set the hood in place and attach the two arms to the brackets from the underside of the body.

If not already done, install the threaded ball studs in the hole on the long hinge arms with the ball pointed toward the outside of the car using a $^{5}/_{16}$" locknut. Then snap the gas piston shaft onto the ball.

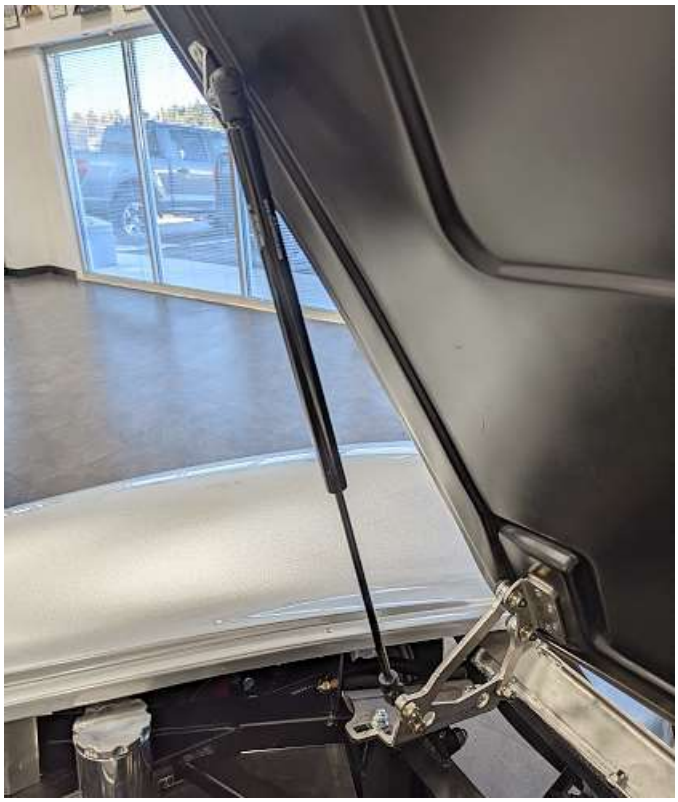

Attach the piston body end to the ball on the hood.

Hood Handles

🛠 $^{1}/_{8}$”, $^{7}/_{64}$”, $^{3}/_{16}$”, ⅝” drill bits, drill, measuring tape, Philips head screwdriver, pliers, marker, 2.5mm hex key, file.

🚘 Three lock set and fasteners

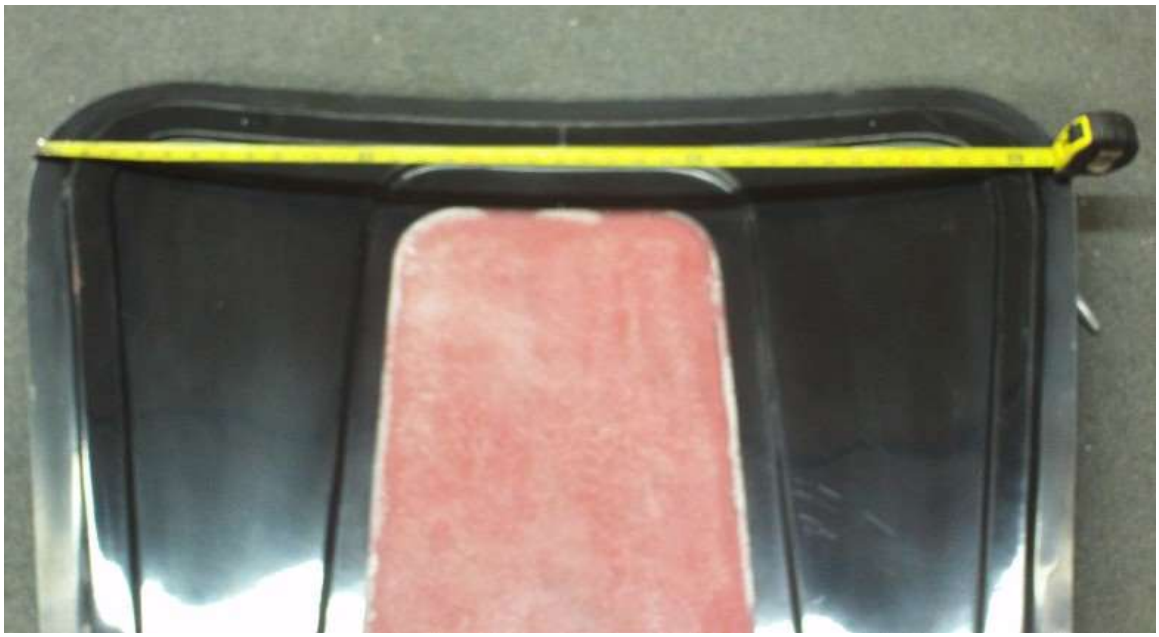

Measure the center of the hood liner rib along the trailing edge of the hood and mark it.

Measure out from the hood center 12” on each side and mark the middle of the hood liner rib for the hood handle location. If the hood sticks up slightly at the corners, change this measurement to 13”

Drill through the hood and the liner starting with smaller bits working up to a ⅝” hole. The larger bits sometimes work better by running the drill in reverse so they do not tear the fiberglass.

Remove the hood handles from the three-lock set and break off the bottom small tabs with a pair of pliers.

Set the handles in the holes drilled in the hood so that they are lined up squarely with the edge and mark the screw holes on the hood.

Drill the holes with a $^{7}/_{64}$" bit then screw the handles down using the screws from the set.

Shut the hood and mark the body where the hood handles line up.

Open the hood and drill two $^{3}/_{16}$" holes in the hood opening recess ¼" on either side of the centerline and ¼" back from the edge of the opening. These are for mounting the hood catch brackets.

The latch brackets are in the handle assembly, center them on the line with the corner edge up against the inner radius of the hood opening and mark the two holes.

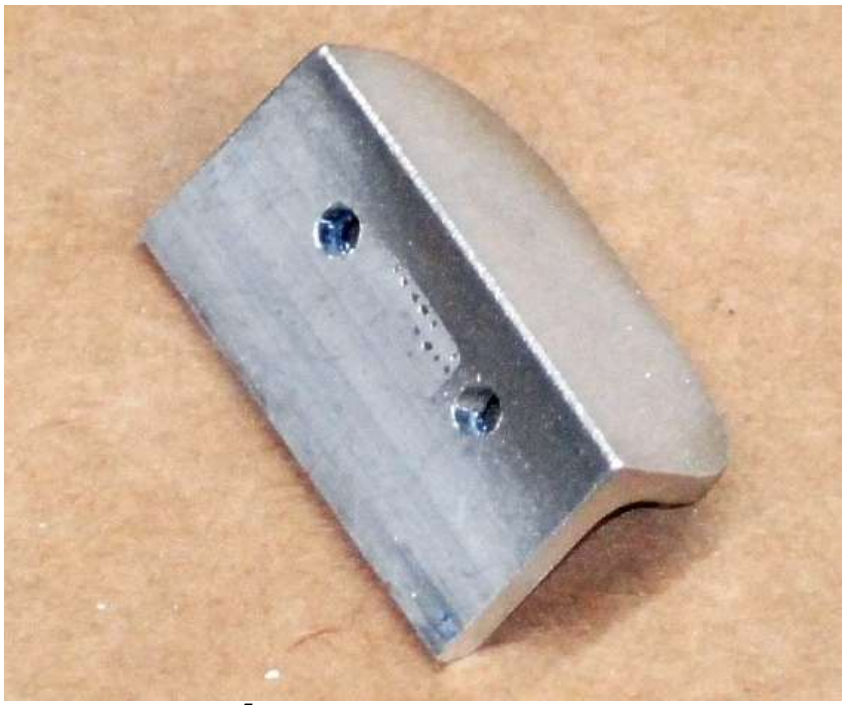

Drill the two holes just marked with a $^{7}/_{64}$" bit and file the edged of the bracket round with a file or grinder for a nice finish.

The four remaining screws are used to hold these brackets in place. They can either be countersunk into the body or used to hold down the hood bumpers to hide them completely.

Attach the cam wedge to the underside of the hood handles and adjust for tightness using a 2.5mm hex key.

Hood Scoop

🛠 Drill, $^{3}/_{16}$" drill bit, marker, ruler, tape measure.
🚘 Hood scoop, secondary body fasteners.

On the top side of the hood scoop mark a line 0.25” in from the edge of the hood scoop flange all the way around the scoop.

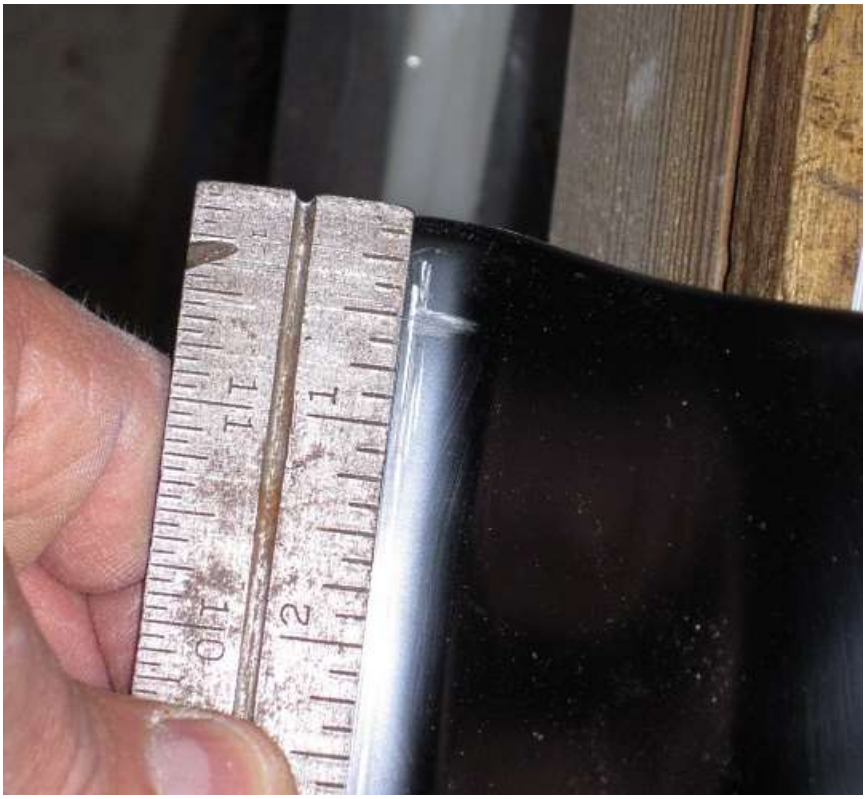

Mark the line 0.50” back from the front edge of the scoop.

Mark the scoop every 3” along the straight sides of the scoop.

At the front of the scoop, measure across the front and find the center then mark the top of the scoop.

On the underside of the scoop, measure from the front back 19.50” and mark the scoop on both sides.

At the lines marked, measure across and mark the center of the scoop.

Use a square to transfer the mark to the back edge of the scoop then mark the top side of the scoop as well.

Where the scoops starts to curve measure from the last straight rivet location 2.50” back and mark the line then another 2.50”.

This should make the rivet spacing look even and have a rivet hole in the back center.

Drill $^{3}/_{16}$" holes around the edge of the scoop.

Hood fitment

🛠 Drill, $^{3}/_{16}$", $^{3}/_{8}$" drill bit, marker, ruler, tape measure, jig saw or air saw, rivet gun.
🚘 Hood, secondary body fasteners.

With the hood marked for its centerline, transfer this to the underside with another piece of tape.

From the front edge of the hood measure back 19” and mark the underside of the hood.

Place the hood scoop on the underside of the hood then use a square to locate the scoop left to right and the front marks to locate it to forward/backward.

Mark around the edge of the hood scoop

Mark 1” in from the sides.

Use the hood scoop to mark 1” in for the curved end.

Mark the hood 2” back from the 19” front mark.

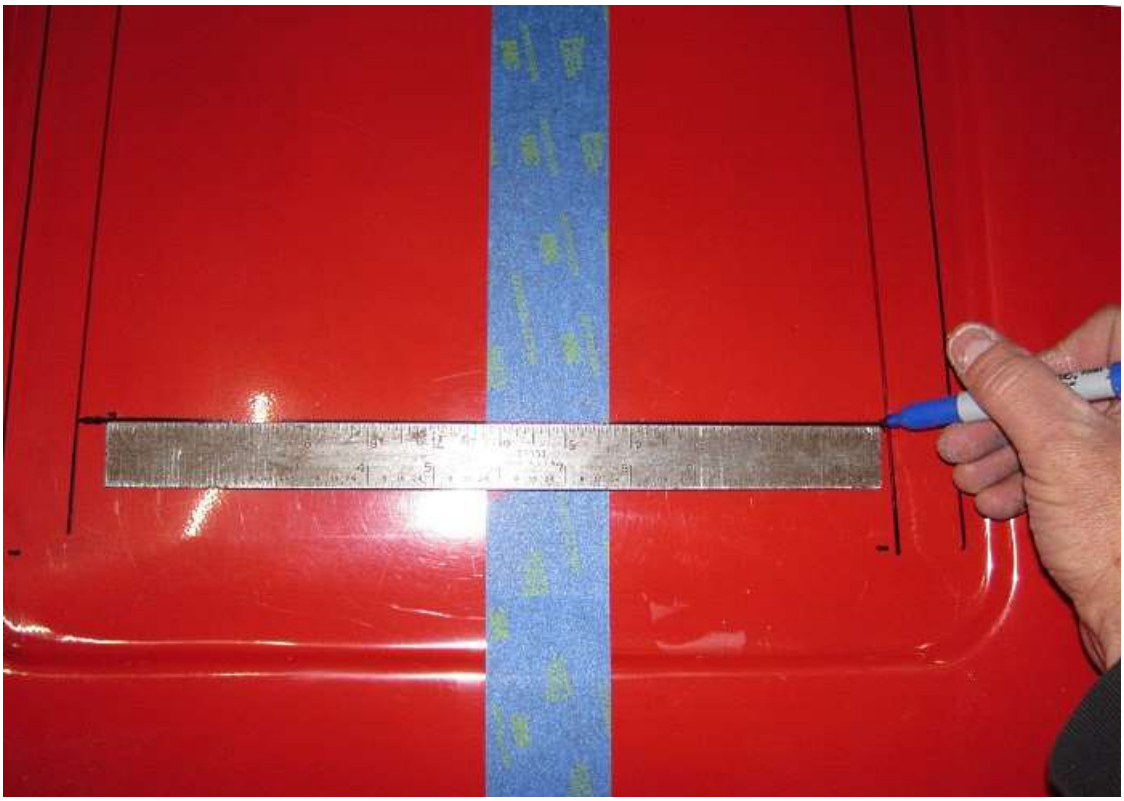

Use a ruler to connect the two sides at the 2” mark.

Mark the inner line to make sure the wrong line is not cut.

Drill ¼” holes at the front corners of the area marked.

Cut the opening in the hood using a jig saw or air saw.

On the top side of the hood measure back from the front and mark the hood at 19”.

Locate the scoop using the straight edge and two marks.

Drill two of the rivet holes on opposite sides of the scoop and the back-center rivet hole using an $^{1}/_{8}$" drill bit. After drilling each hole, place a rivet in the hole so that the scoop does not move.

Drill out the remaining rivet holes putting a rivet in each hole as you go.

Separate the two pieces for painting.

Windshield

🛠 Philips head screwdriver, marker, ½” drill bit, drill, hack saw, ¾” wrench, ratchet, ¾” socket, friend.

🚘 Windscreen box.

- The strips along the sides of the windshield that the screws go into are brass. The brass threads strip easily so take your time and make sure that they thread correctly.
- Windshield cut outs may need to be expanded to get the windshield angle desired.

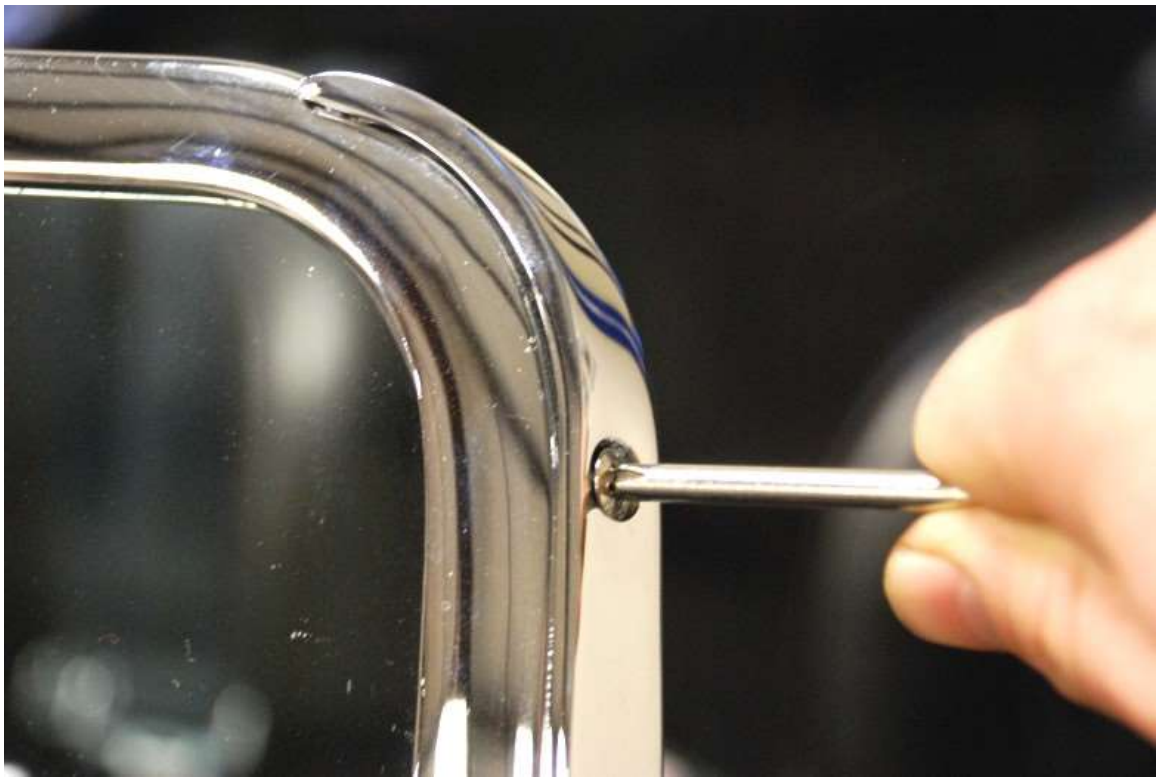

Unpack the windshield components and carefully screw the sidebars onto the windscreen.

With the help of a friend, slide the windshield down through the slots in the body until the bottom seal is resting on the body.

Angle the windshield so that the measurement from the center of the top side bar screw to the inside corner of the door opening is 27”.

Mark the chassis mounting holes on the arms. Remove the windshield from the car and then remove the sidebars from the windshield.

At the marks made on the sidebar, measure and mark the center of the sidebar to give the correct angle adjustment on the windshield. Drill the holes with a ½” bit.

The arms are too long, you need to trim off the excess and round the corners on the end.

Remount the sidebars on the windshield.

✋ Do not pull the arm in to the frame brackets. This will crack the windshield. Use washers to fill the gap.

Slide the windshield into position and bolt in place using the windshield mounting hardware. If there is space between the windshield bar and the mount, use washers to fill the gap. Snug the bolts up so that the angle can get set.

Measure from the middle of the top windshield screw to the inside corner of the rear door, this should be set at 27.00”. If necessary, slot the holes more so that the angle can get set and there is no side loads on the windshield frame.

Tighten the windshield bolts using a ¾” wrench and socket.

✋ The windshield should remain bolted down while you fit the doors.

Interior Rearview Mirror

🛠 Philips head screwdriver, drill, $^{1}/_{16}$”, $^{1}/_{8}$”, $^{3}/_{16}$” drill bits, marker, measuring tape
🚘 Rearview mirror (Box 6), #8 x 1.50” Oval head screws

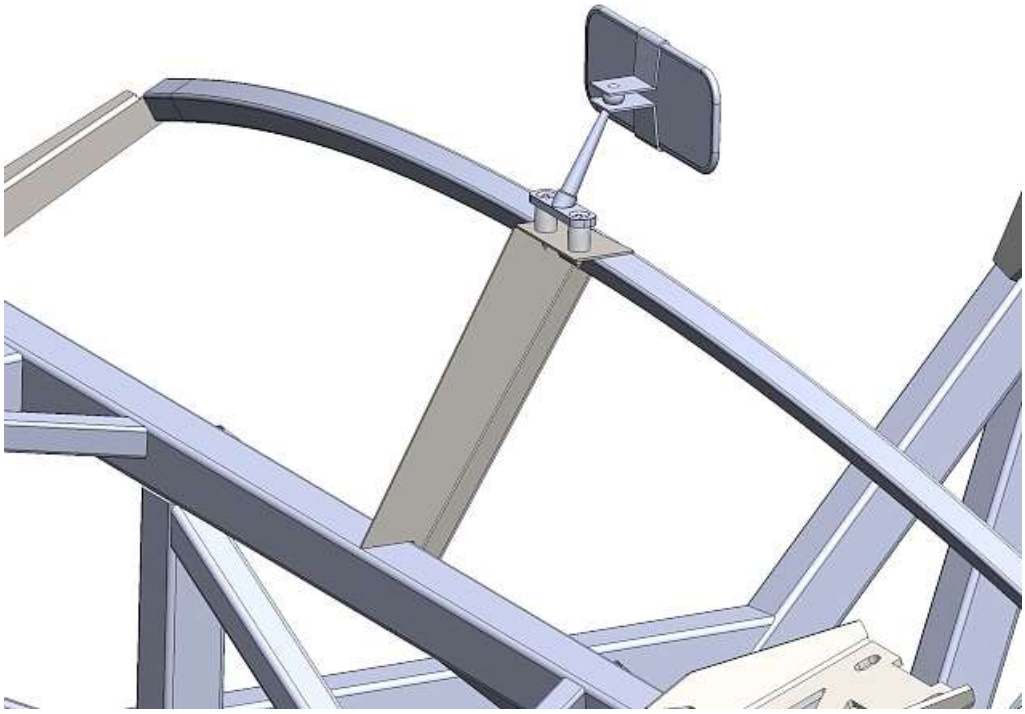

The rearview mirror will get mounted to the flat area on the center dash frame mount.

Use a tape measure to measure in from the body lip to closest corner of the dash tube.

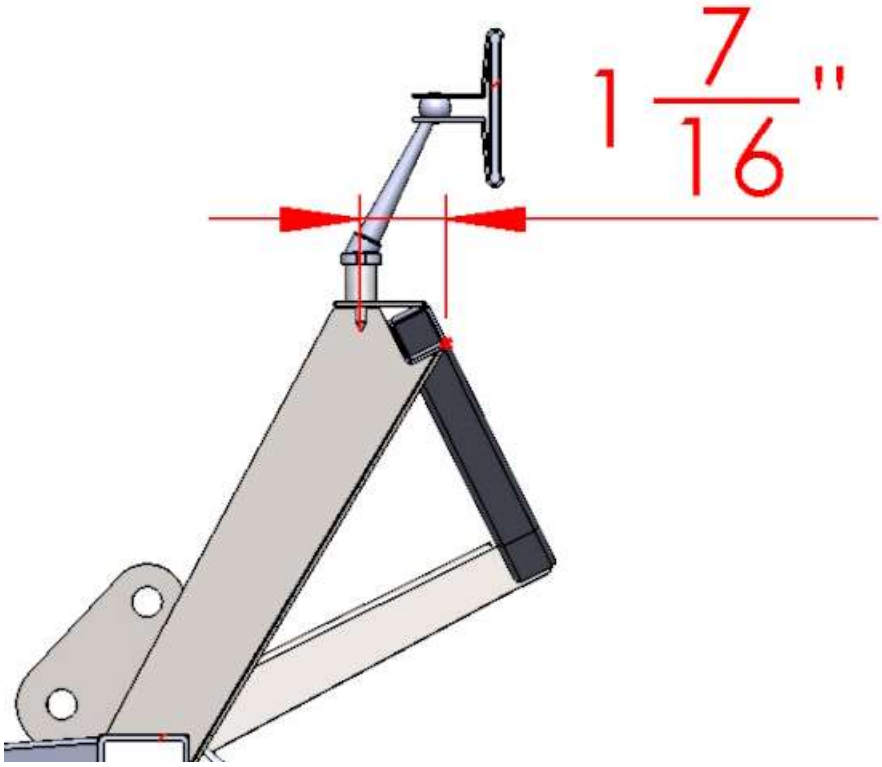

From the dash tube, the mirror should mount about 1.4375” from the front of the tube.

Add the body to tube and tube to location dimensions together.
Mark a line on the body for the center of the mount.

On top of the body measure in and mark the body for the mount location.

Line up the rearview mirror with the center mark and mark the holes in the body.

Use a $^{1}/_{16}$" drill bit and slowly drill through the body into the mount at the mirror hole location.
Follow this with a $^{1}/_{8}$" drill bit.
Use the $^{3}/_{16}$" drill bit next but **only** drill through the body.

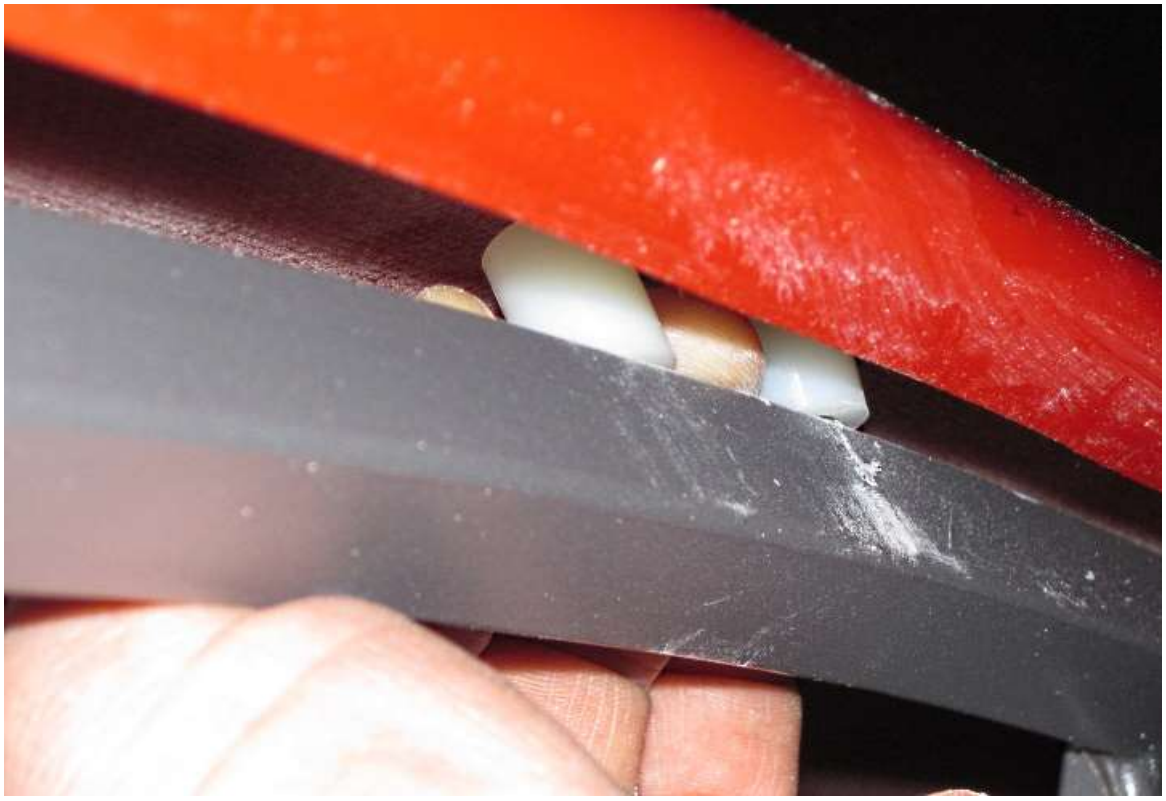

Put the plastic spacers between the mirror mount and the body so the screws can go through them.

Put the mirror screws through the mirror, body and spacers and screw them into the mirror mount.

Door fitment

🛠 $^{3}/_{16}$” hex key, marker, ⅝” socket, ratchet, air saw, orbital sander, $^{3}/_{16}$” drill bit, drill, rivet gun

🚘 Door hinges, doors, secondary body fasteners.

✋ The windshield, inside rearview mirror, and trunk side aluminum with bulb weatherstrip must be installed to mount the doors correctly.

If you have removed them, remount the door hinges on the chassis. The U-nuts sit allow only one hex wrench is needed for adjustment.

Position the door in the body to see where it may need to be trimmed to fit the opening. Mark the door and only remove enough material to get it to fit.

Hold or tape the door in position and attach the hinge to the studs.

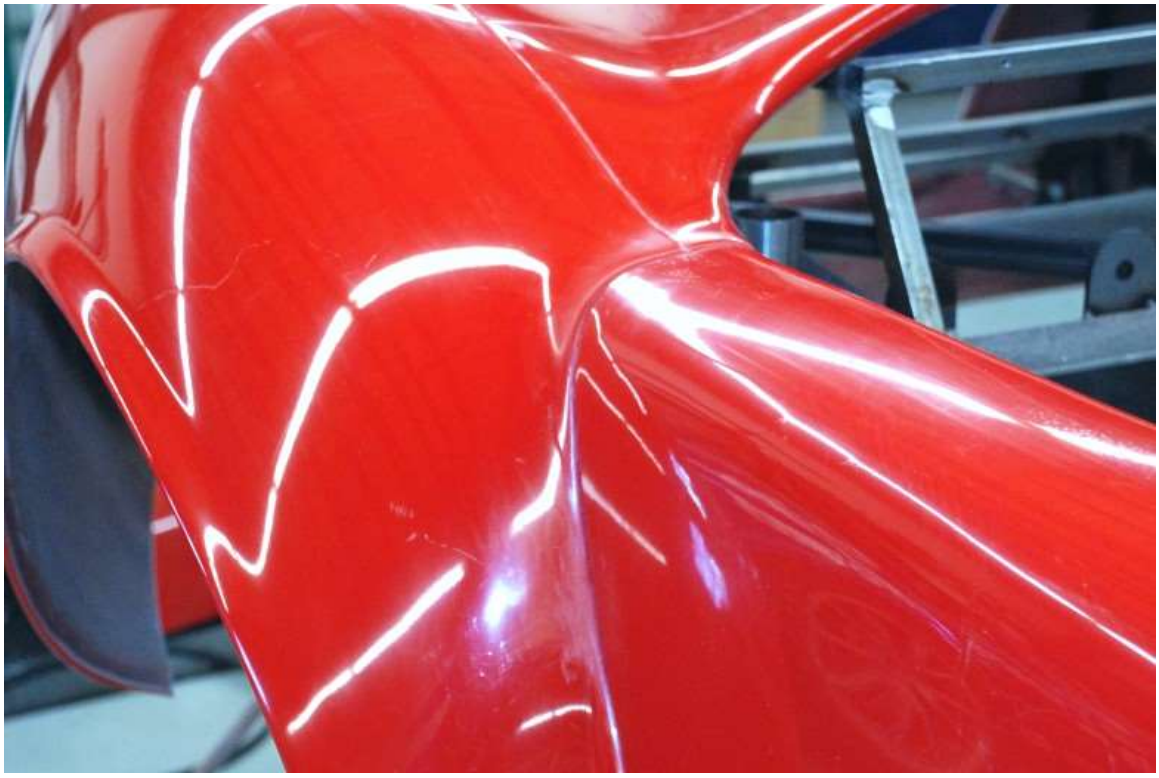

Adjust the door with the hinge until the panel surfaces are lined up with the body. Start at the top of the door and match the curved surfaces.

If necessary, the body can be moved in and out when pulled. Start with the body all the way in.

Add washers behind the body if necessary.

Set the gaps on the doors as you did with the hood using a marker.

Door Latch

🛠 $^{7}/_{16}$" wrench

Door Latch components (Box 6)

The door latch cover is stainless and can be polished if desired.

Attach the release lever to the door latch then attach the door latch to the door squeezing the cover between the latch and the door frame. Leave the latch snug so that it can slide for now.

Attach the door latch striker to the frame.

Do not fully tighten the striker yet, snug the striker up so that it can slide in the slot.

Trunk fitment

🛠 air saw, orbital sander, marker
🚘 trunk

Trim the trunk lid edges enough so that it just fits into the opening.

Screw the trunk to the hinge arm mounting pads leaving them loose enough that they will just move.

Close the trunk and wiggle it into position then open and tighten the bolts. This may take a little adjustment to get the trunk to sit down right. You can also use some of the rubber bumpers from the hood opening as a temporary means of holding the surfaces level.

Trunk Latch

- ⅜” socket, ratchet, flat head screwdriver, Philips head screwdriver
- Three-lock set and fasteners

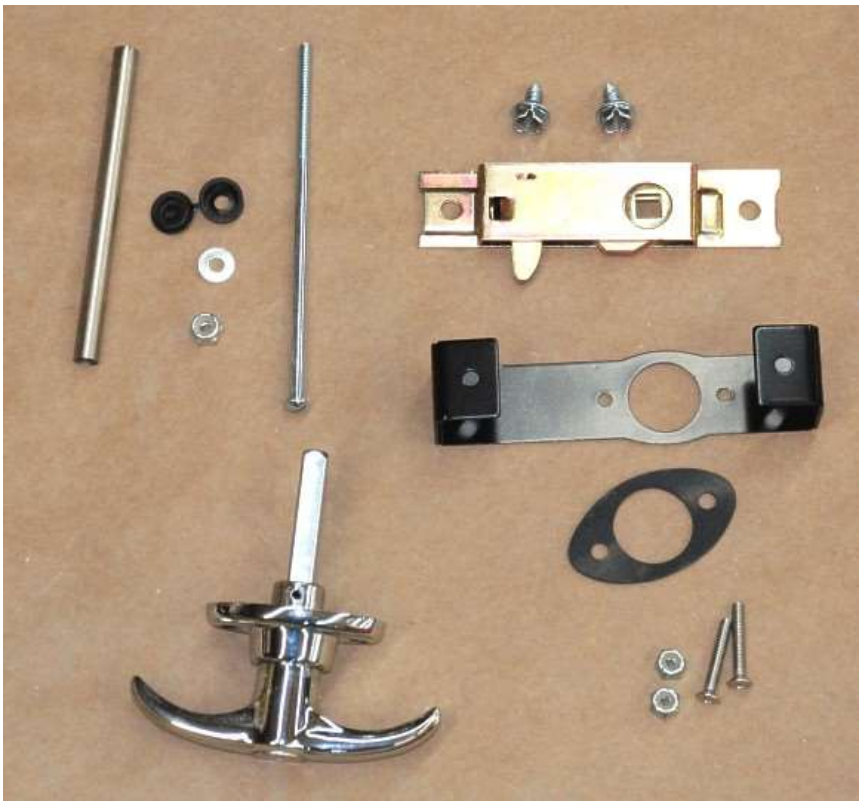

Find the trunk latch and components in the Three-lock set.

Screw the trunk latch to the holder with the short #14 screws lining the small square hole with the hole for the handle.

Bolt the handle to the trunk running the bolts through the trunk and the latch mount.

Latch pin

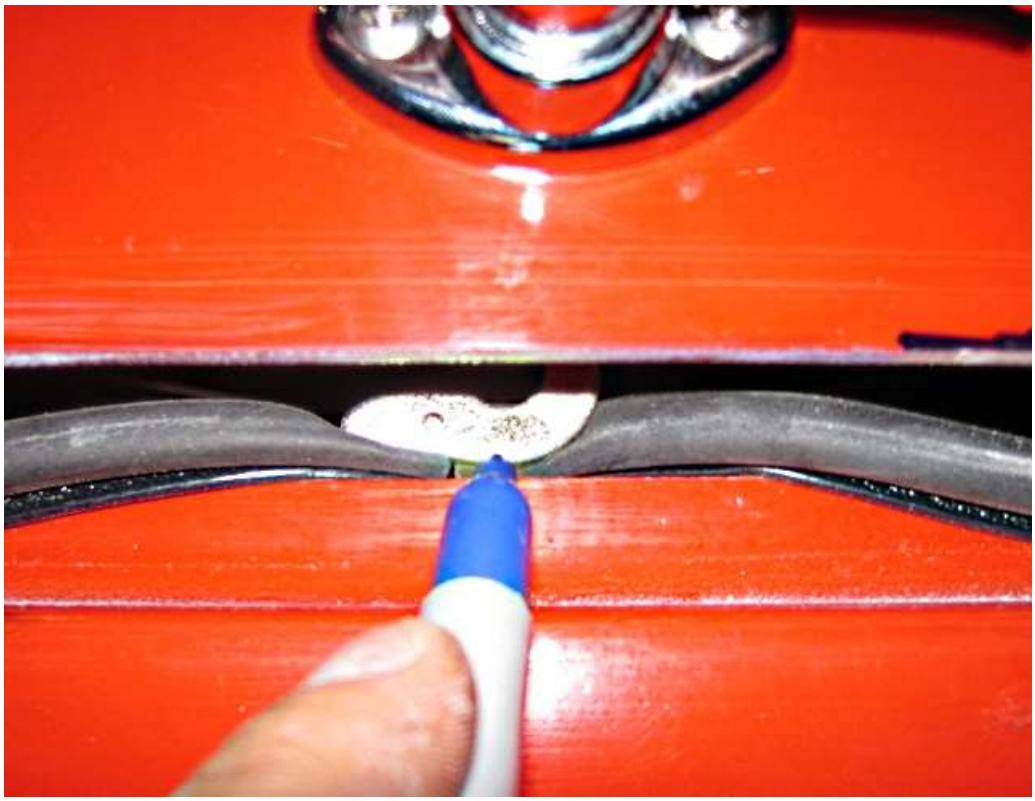

Close the trunk and with the latch in the locked position, mark the lip of the body where the latch is located.

Use the latch sleeve on the latch to see the center height of the latch sleeve compared to the edge. Make sure the sleeve is 90 degrees to the latch. In the picture this is just above the edge but this is dependent on the gap around the trunk that you make.

Use the screw head cover and put is on the body latch line as low as possible and mark the center on the body.

Use a paint stick or what was used to set the gap of the trunk to draw a line on the body where the edge of the trunk will be.

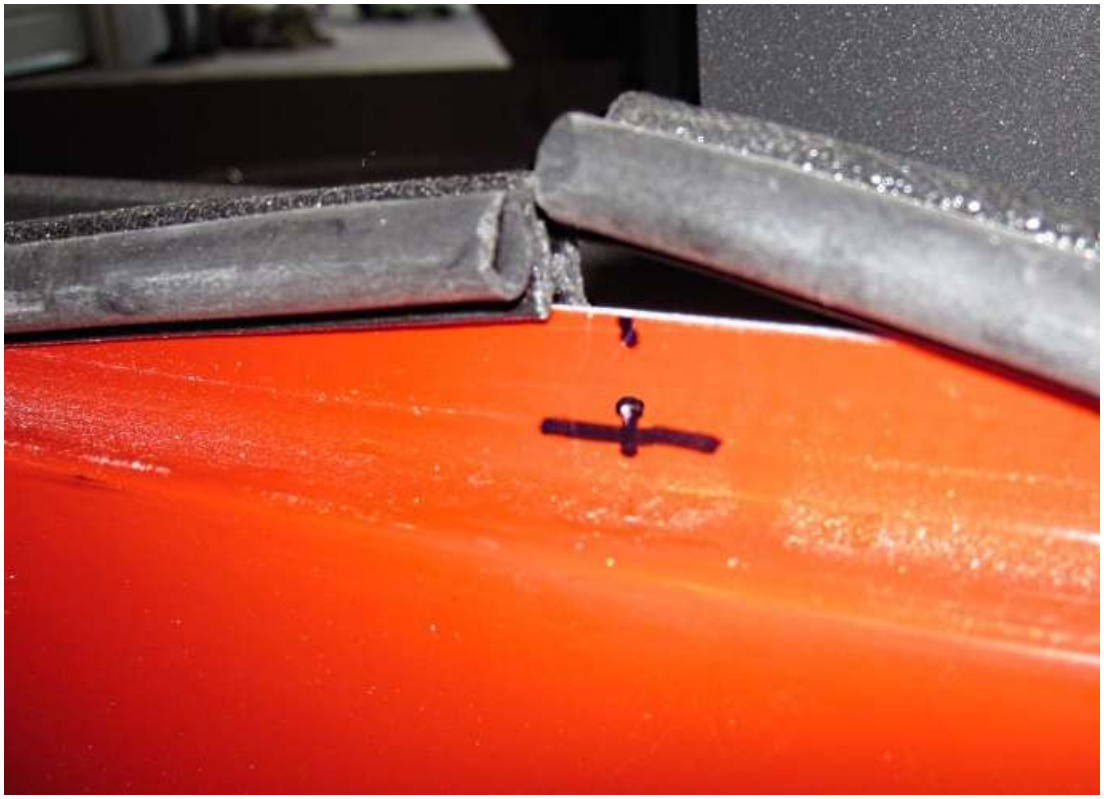

With the pin location compared to the trunk edge known and the trunk edge marked on the body along with the lowest mount point of the pin cover marked, the locations should match up. The latch cover may need to be trimmed slightly to go onto the radius of the body.

Drill the body location with a $^{3}/_{16}$" drill bit.

Put the pin screw through the body and up to the frame. Use a level and a square to locate the end of the screw.

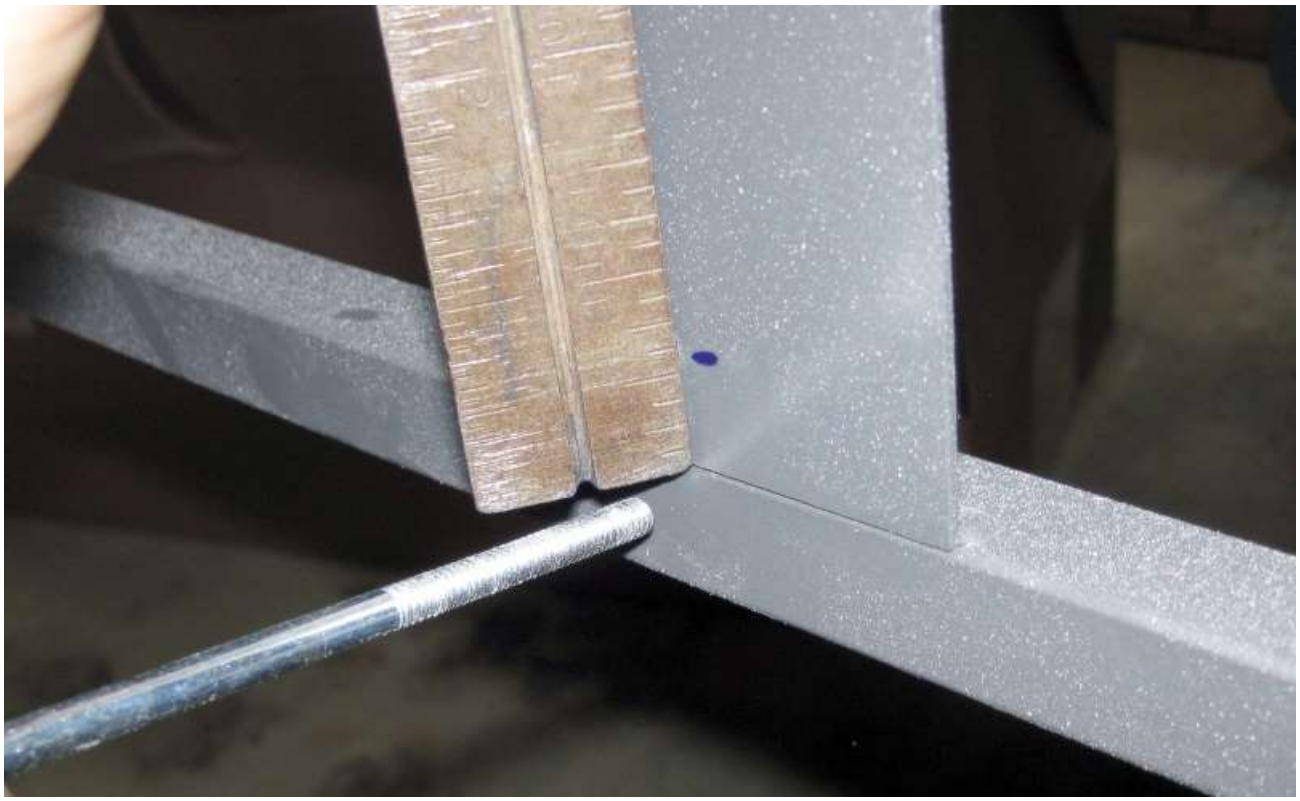

Measure the height of the screw location from the lower ¾” tube.

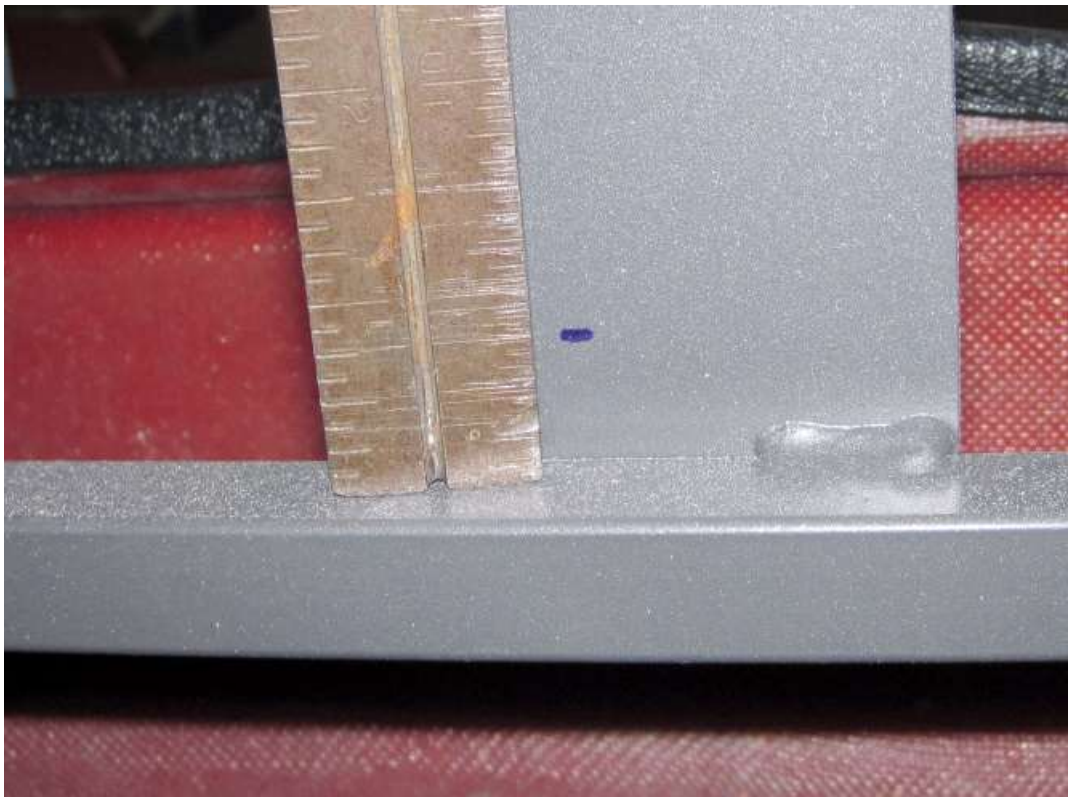

Transfer this measurement to the backside of the plate. Do the same for the side location.

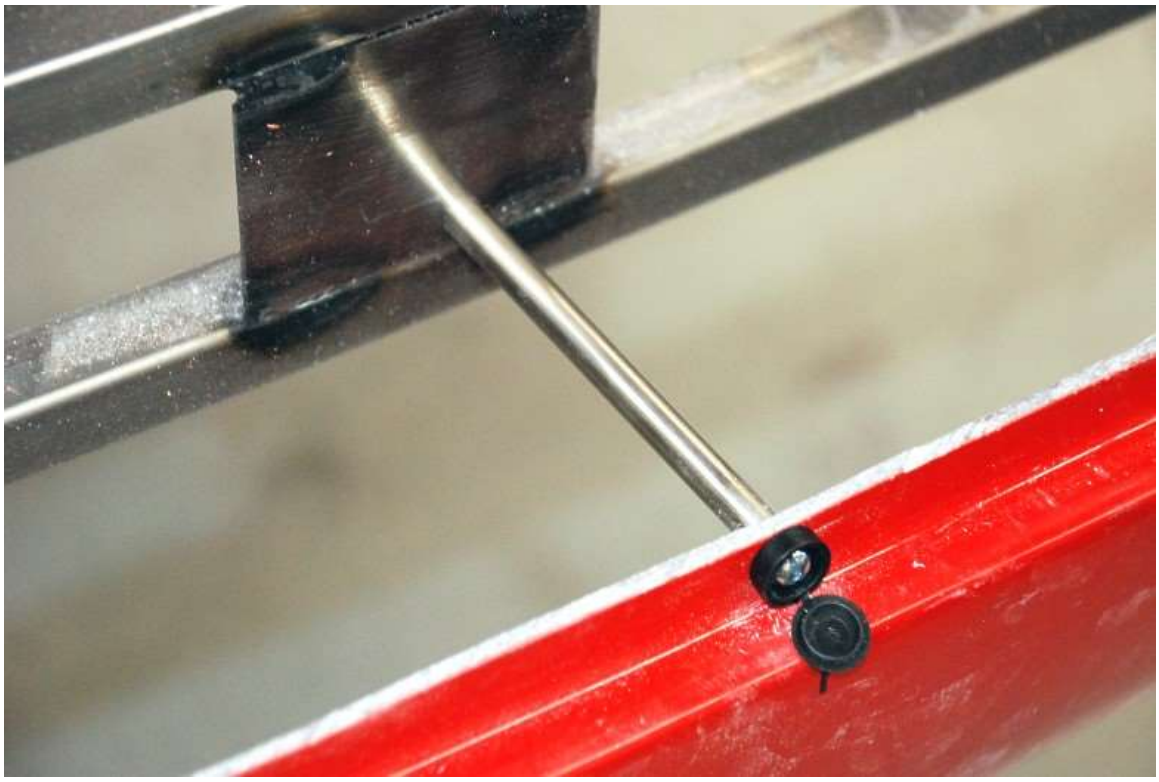

Install the long screw that holds the latch pin in place. It goes through the plastic cap then the body then the sleeve and into the chassis plate.

Close the trunk and test fit the latch.

If the latch is loose, it can be bent with channel lock pliers to snug it down.

Side Mirror (Polished GT400)

🛠 Drill, $^{13}/_{64}$" or $^{7}/_{32}$" drill bits, marker, $^{5}/_{16}$" wrench, masking tape.

🚘 Rearview mirror (Box 6).

✋ Only one mirror is included with the kit. A second one is available if desired.

Put the gasket on the bottom of the mirror so the holes line up with the threaded hole locations.

Put masking tape in the rough location of the mirror.

Sit in the seat to find a good location you can see the mirror from and see clearly over the rear fender.

Hold the gasket in place, remove the mirror and mark the location of the mounting holes.

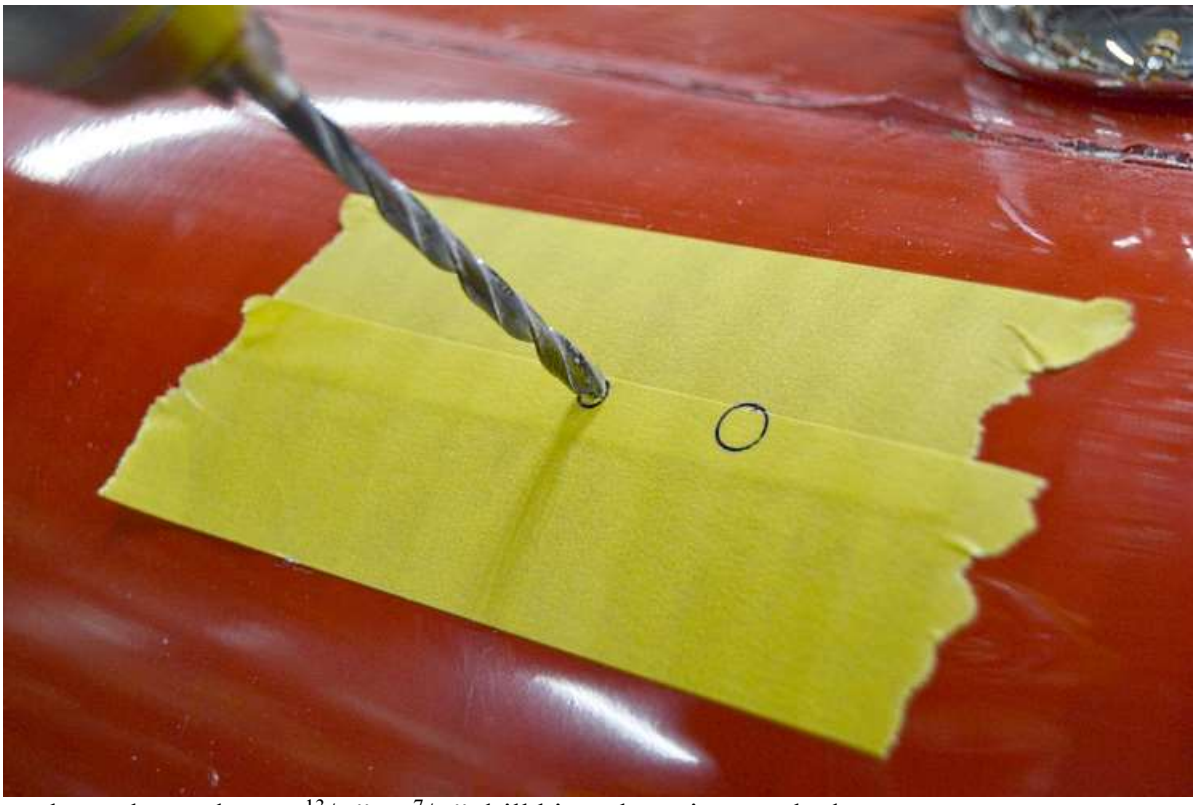

Remove the gasket and use a $^{13}/_{64}$" or $^{7}/_{32}$" drill bit at the points marked.

From the underside of the body, use a $^{5}/_{16}$" socket to attach the mirror to the body.

Side Mirror (Brushed GT300)

The brushed mirror mounts in a similar way to the polished mirror. Follow the same directions using masking tape and a marker.

Body Stripes/centerline

Use the outside radius of the headlight area to measure across and find the center of the body on the front deck.

Use the oil cooler hole to find the center in this area.
Use the inside rearview mirror for the center near the cockpit.

At the top front of the trunk measure across and mark the top of body area.

Use the trunk latch hole for this area of the body.
Use a single piece of masking tape from the front lower oil cooler area to the bottom back of the body then cut the cockpit area out, trunk gaps and the hood gaps.

Body Cut-outs

Fuel filler

🛠 Drill, ⅛”, $^{7}/_{32}$” drill bit, 3½” hole saw or air saw or jig saw, masking tape, scissors.
🚘 Fuel filler template, Aston Lemans Cap components.

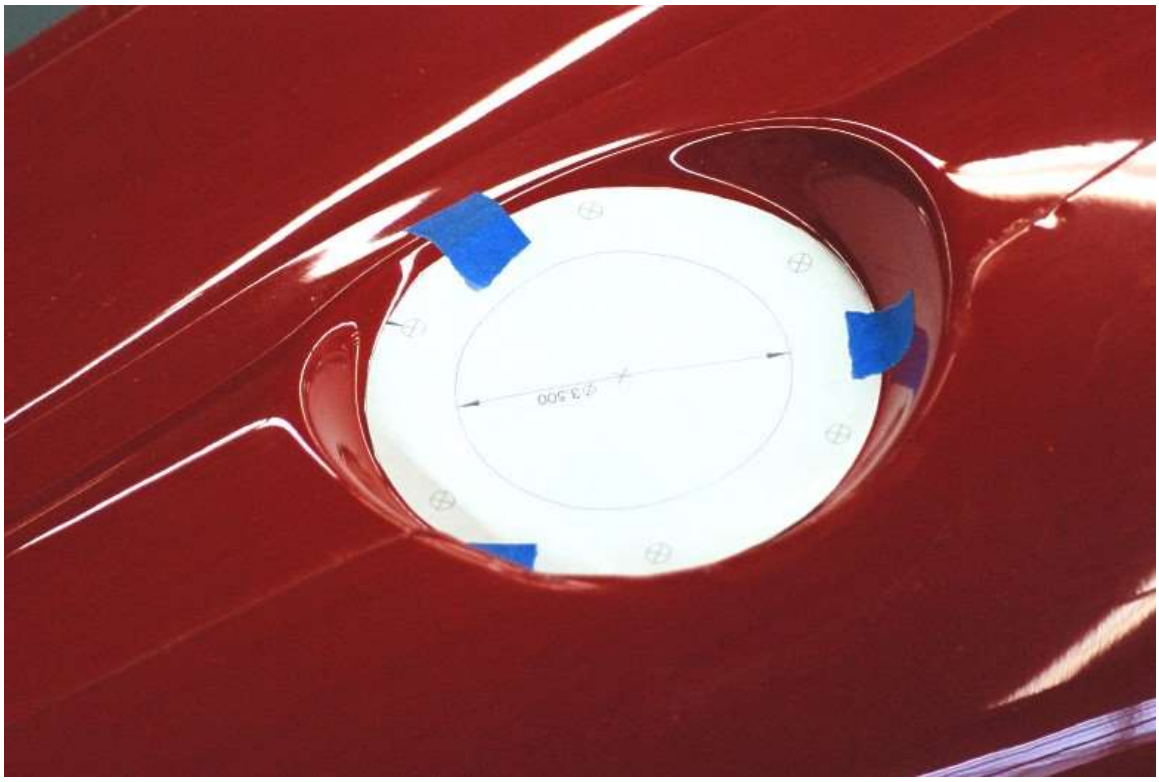

Locate the template in the appendix and only cut out around the outside diameter of the circle. Tape the circle in the gas cap recess of the body.

Use a 3½” hole saw for the center opening. If you do not have a hole saw this size, you can cut the center circle out of the template and use the remaining template to mark for a jig-saw instead.

Locate the cap in the hole so that when open the cap will not hit the body and you will have access with a gas station filler handle.

Use an ⅛” drill bit through the flange holes to mark all the outer screw holes on the body.

Remove the cap and finish drilling the $^{1}/_{8}$” holes.

For one of the holes on the inside of the body Use a $^{7}/_{32}$” bit drill for the grounding strap bolt.

Tail light

🛠 Drill, $^{7}/_{32}$”, ½” drill bits, file.
🚘 Tail light

Use one of the black tail light mounting gaskets as a guide to locate the taillight on the body.

Use a $^{7}/_{32}$" bit to drill mounting holes for the taillight studs then use a ½" drill bit where the wires will go through the body.
Test fit the lights and file the holes to fit if needed.

Turn Signal

🛠 Drill, $^{7}/_{32}$" drill bit, 1¼" hole saw, marker.
🚘 Turn signal template, Amber front turn signal lights

Remove the gasket from the turn signal box and use it to center and trace the mounting holes and large center hole for the turn signal.

Drill the outer holes with a $^{7}/_{32}$" drill bit and the inner with a 1¼" hole saw.

Test fit a light and adjust if needed.

License plate light

🛠 Drill, ¼”, ⅜” drill bits, scissors, masking tape, marker, ruler

🚗 License plate light template, license plate light and bracket.

✋ This kit is only a collection of parts designed for use primarily as a race car. Applying the license plate bracket does not mean that this vehicle is street legal. Factory Five Racing does not build completed or partially completed street vehicles. If you choose to title, register, and operate your kit on public roads, you are responsible for ensuring that the vehicle you build complies with all Federal, State, and local laws regarding its use.

✋ The inclusion of the license plate bracket does not indicate that this kit complies in any way with these laws.

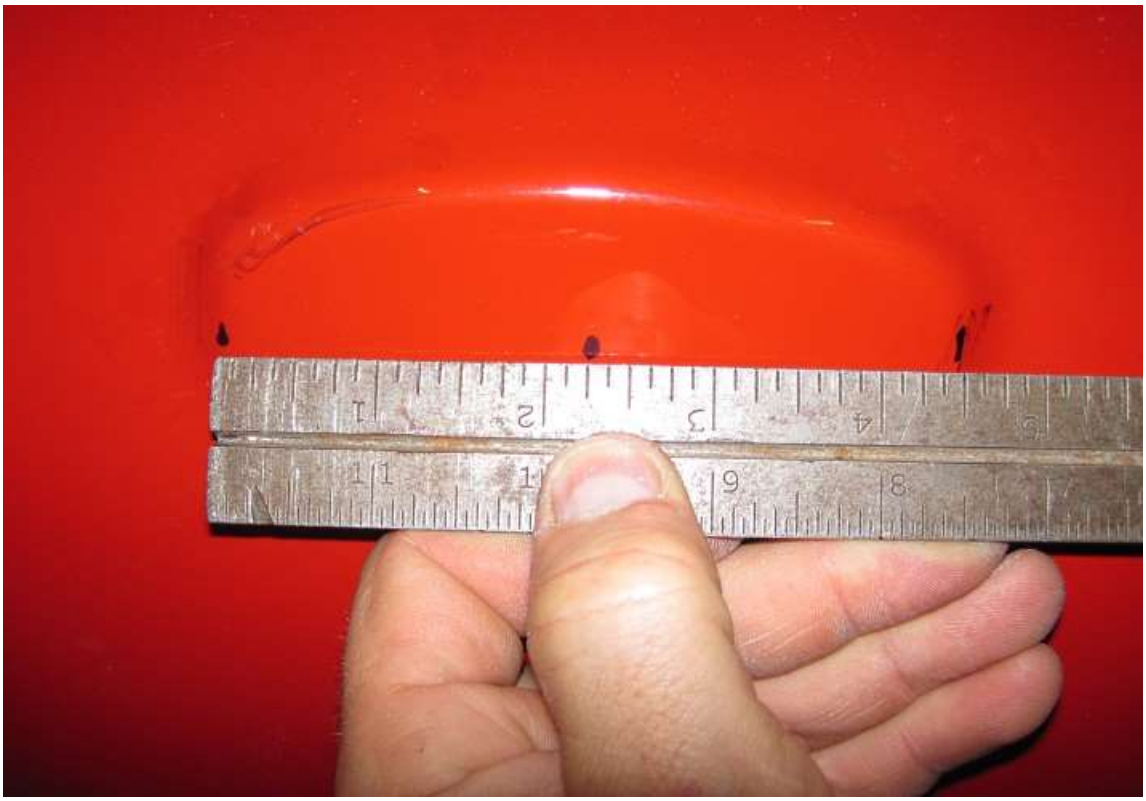

Use a ruler to measure and mark the ends and the middle of the light area.

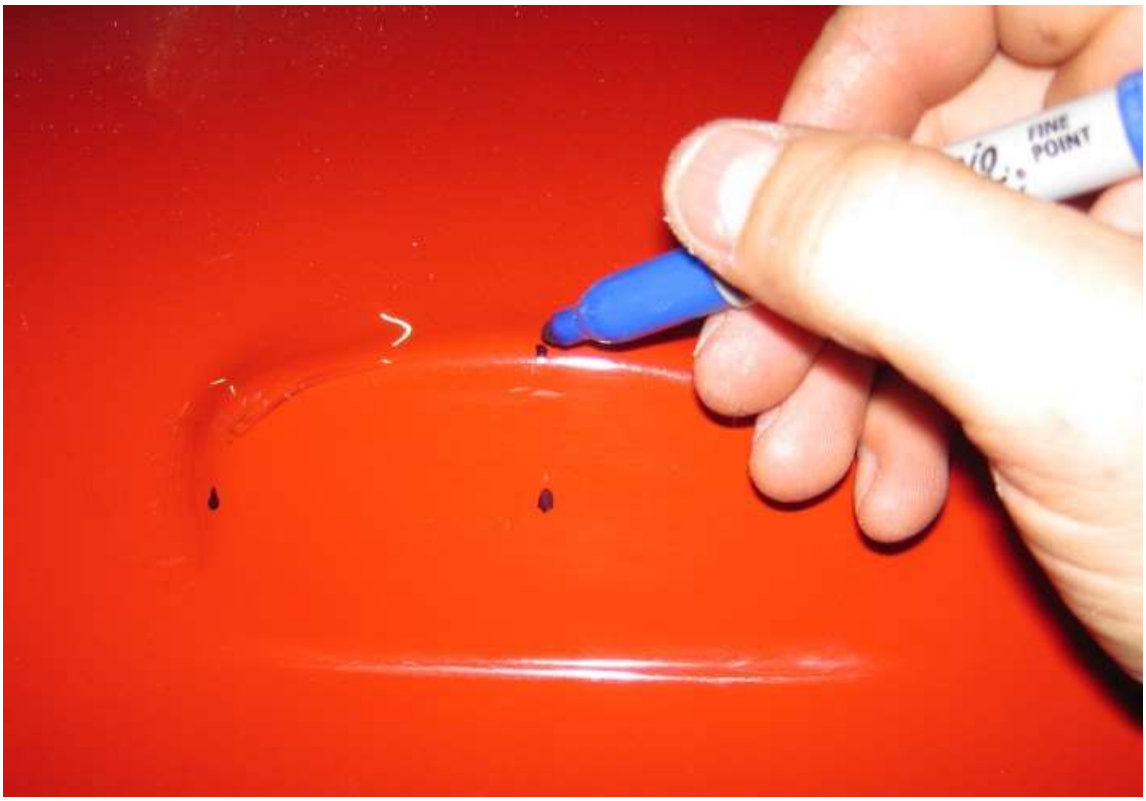

Mark the top center of the light area.

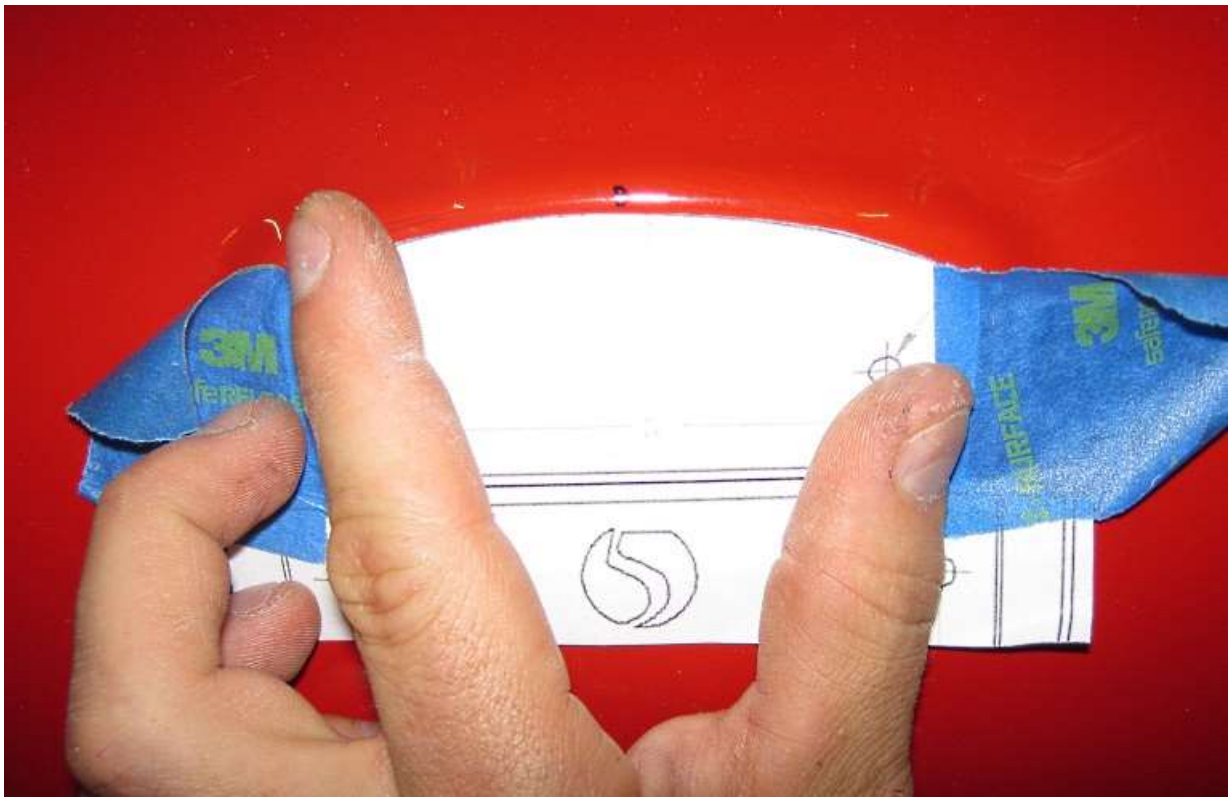

Align and tape the drill template in place.

Remove the license plate light cover and use it to double check the template location.

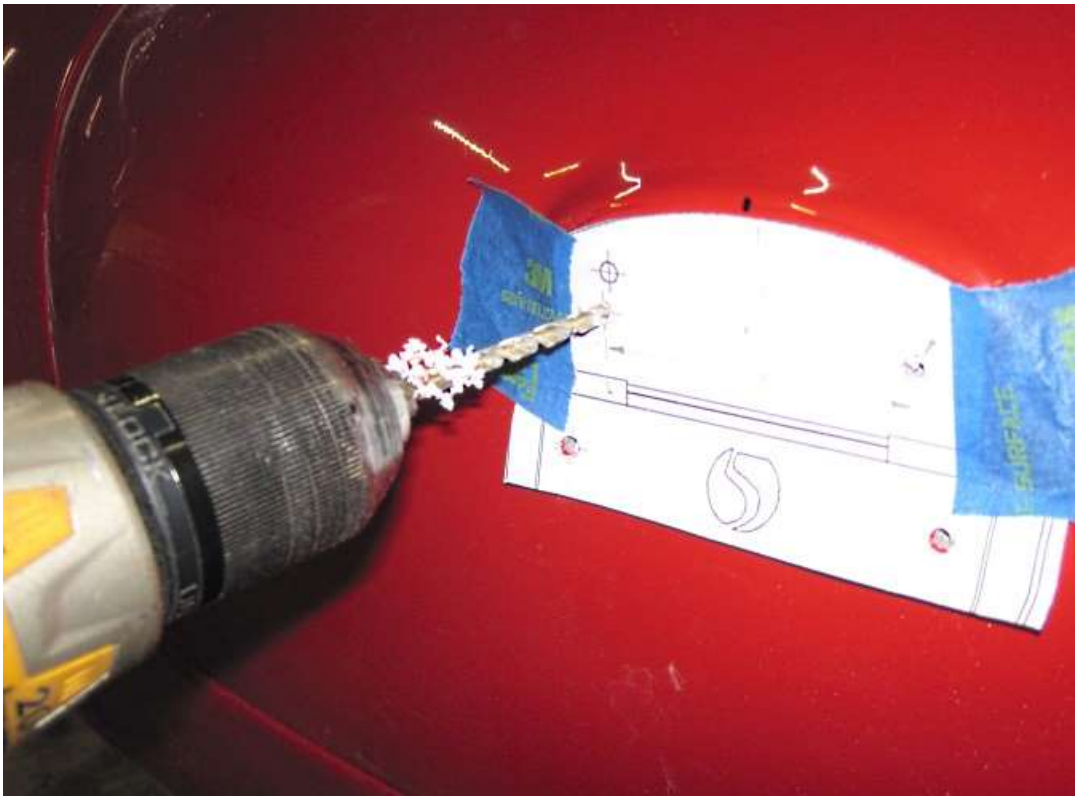

Drill the two mounting holes and the wire hole only.

Push the light into the trunk and drill through the license plate mounting holes with a $^{3}/_{16}$" drill bit.

Look at the license plate screw length. If necessary, grind the pointed end of the screw off so that it will not hit the body.

Side exhaust

🛠 Drill, 2½” hole saw, air saw or jig saw.
🚘 Side exhaust template

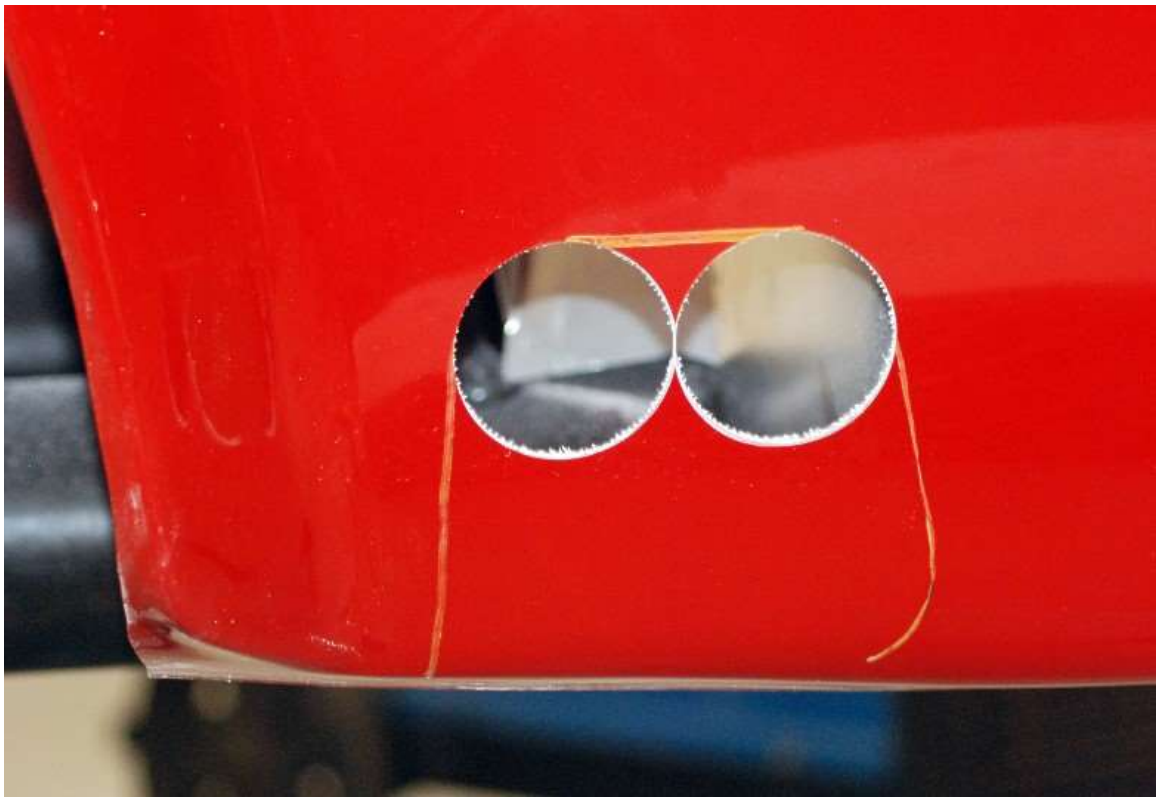

The pattern for the standard exhaust cut out is pre-traced on the body. Using a 2½" hole saw cut the upper two corners of the pattern out.

Using a jig saw cut the remaining straight sections and radius on the lower rear corner.

Headlights

🛠 Drill, $^{1}/_{8}$", ¼", $^{3}/_{8}$" drill bit, razor knife, masking tape, air saw or jig saw, level.
🚘 Headlight template, headlight components,

Cut out the headlight templates from the back of the manual on the outermost diameter and tape them in the center of the fender with the line level with the ground.

Cut the center of the template out and trace the inner circle with a marker.

Drill the two smaller corner holes with a ¼" drill bit to mark their location. Follow this with a $^{3}/_{8}$" drill bit.

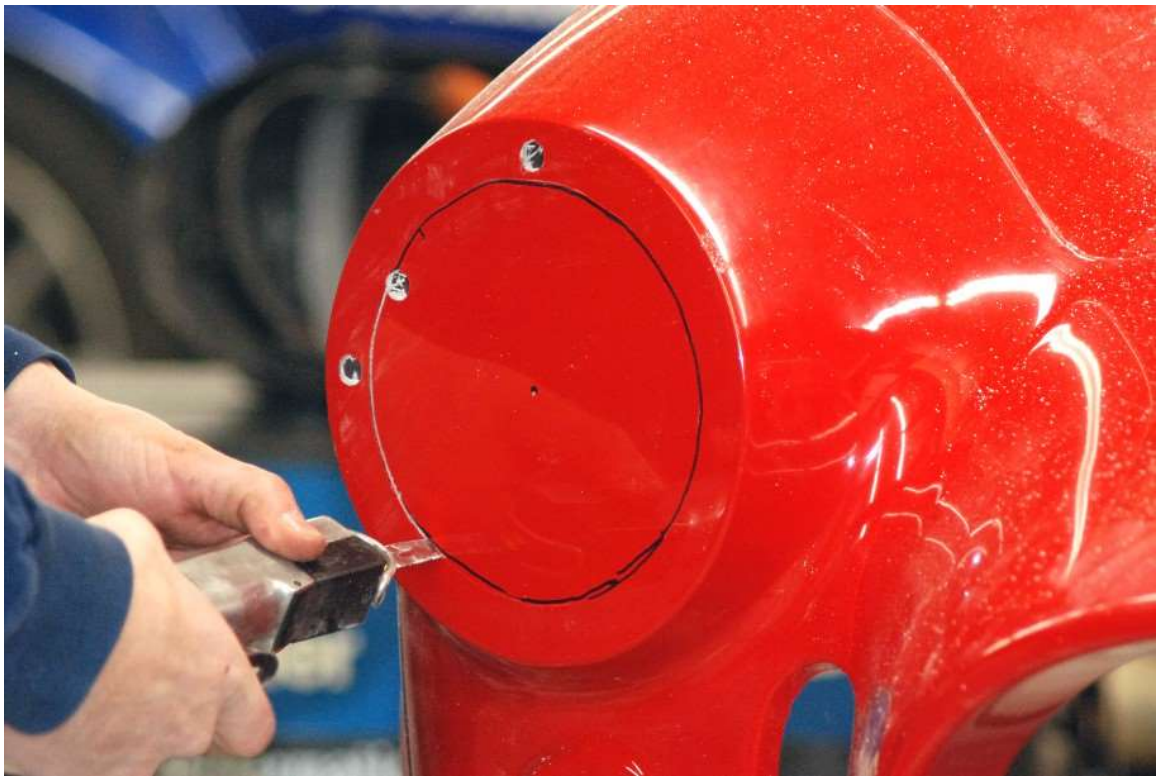

Using a jig saw, cut the inner hole out of the body, use a larger drill bit to make a hole to start your cut.

Test fit the light bucket and rubber gasket making sure that they sit flat and the bucket is centered on the fender. Mark and drill the four mounting screws for the headlight bucket using a $^{1}/_{8}$" drill bit.

Side louver

🛠 Drill, 1¼" hole saw, jig saw or air saw, measuring tape, marker
🚗 Side louver template

Use the template and measurements in the picture below to locate the template on the body.

Use a 1¼” hole saw to cut the corners on the traced opening for the side louver.

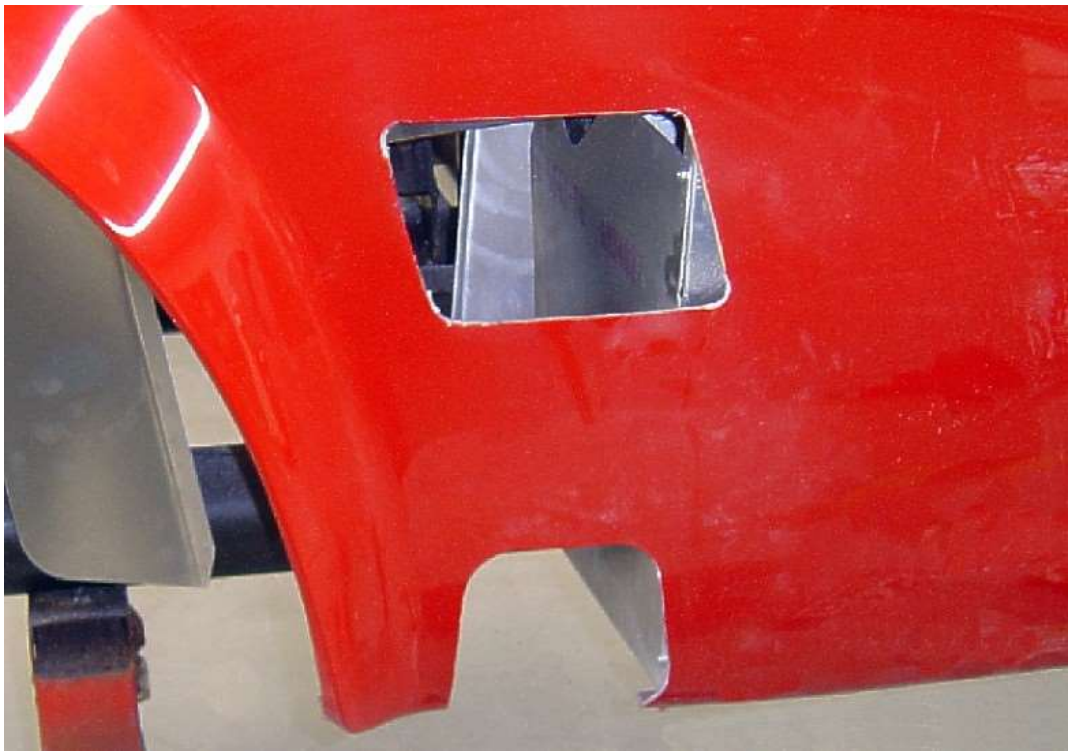

Connect the flush surfaces of the holes with a jig saw.

Roll bar

🛠 Drill, 1¾” hole saw, air saw or jig saw, file
🚘 1.50” driver side rollbar.

The roll bar holes are marked on the body and need to be cut out using a 1¾” holes saw. The front two holes are cut centering the saw in the marked circle and drilling vertically to match the angle the bar comes through the body.

To cut the rear roll bar leg, make 2 holes overlapping so that they form the right length. Use the same 1¾” hole saw centered in the front of the traced opening and with the drill leaning at a 45° angle toward the inner front leg. Stop the drill when it has cut through half of the hole.

The rear of the hole is then finished using the whole saw vertically.

Trim the remaining flash on the opening with a file or jig saw.

Put the rear rollbar leg through the body and onto the frame. If using rollbar grommets, put the rear ring and grommet on as well.

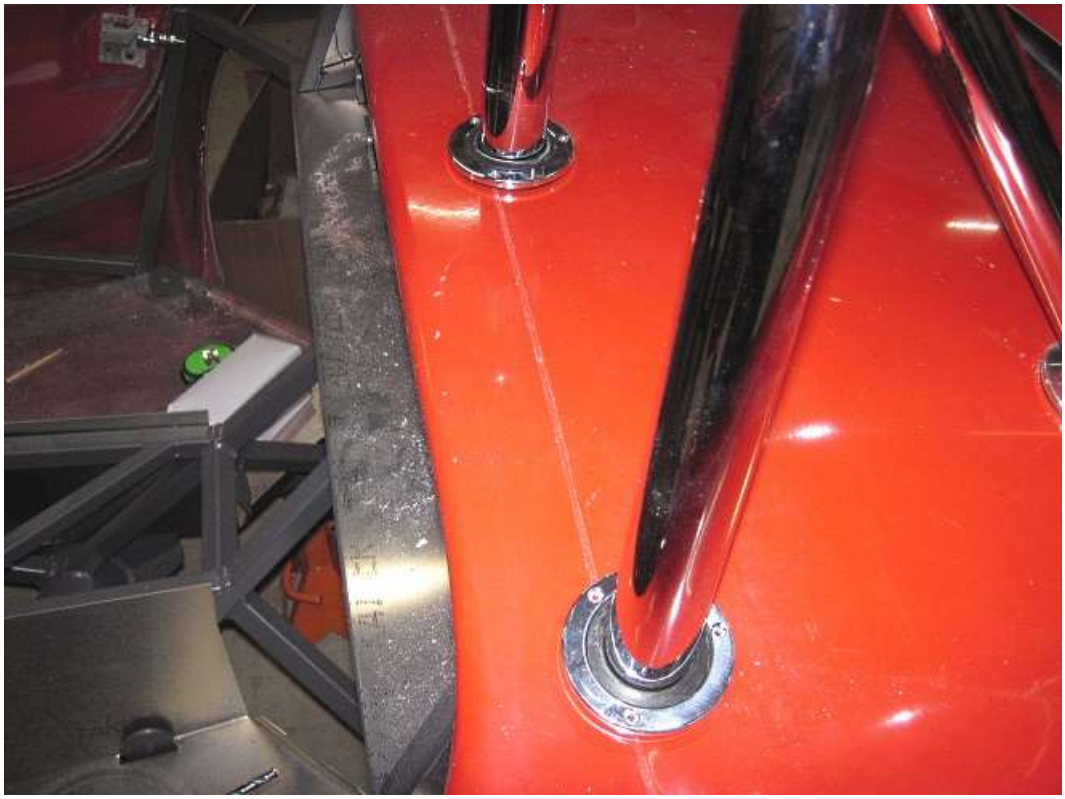

If using rollbar grommets, put the front rings and grommets onto the rollbar hoop then put the hoop through the body and on to the frame.

If necessary, use a plastic mallet to seat the rollbar hoop down and make sure the rear leg goes all the way up onto the hoop.

Rollbar grommets (Optional)

🛠 $^{1}/_{8}$" drill bit, drill

Locate the rear grommet so that it sits flat then drill the holes using an $^{1}/_{8}$" drill bit.

Locate and drill the front grommet holes.

Remove the rollbar and drill any of the holes that were hard to reach

Final Prep

🛠 Sand paper

- The windshield and side exhaust must be mounted to the car to obtain the correct body location to create the correct gaps and opening sizes on the car before it is painted.
- Refer to appendix A for a drawing on how to make a wooden buck to hold the body. The dimensions do not have to be exact; a rough shape is all that is needed to hold the body.

One of the most important details in the bodywork is the finish on all the edges and openings. All the following edges are visible on the finished car and need to be evened out and have a small radius sanded in for a good-looking finish.

- Doors
- Hood
- Trunk
- Hood Scoop
- Wheels Wells – Flange should be $^{3}/_{8}$" wide
- Side Vents
- Exhaust
- Brake Duct openings
- Main radiator opening
- Oil cooler opening
- Hood Opening
- Roll Bar cut outs
- Door openings
- Cockpit edges

The curled under side body edges are not as visible but just taking a little time here to get the lines straight and a small radius makes for a much nicer finish as well.
The headlight, taillight, fuel cap, turn signal, quick jack, and trunk openings all are covered and do not need the finish work of the other areas.

Mark the trunk and door hinges before removing the last time so that you can bolt them back together in the same position that they came off. They may still need minor adjusting during final body installation but this will get you much closer.

Body Painting

- Remove all trim, doors, windshield etc. before beginning body work
- The primer gel coat sands easily, and is a forgiving material to work with.
- The body comes out of the mold with a wax release compound and a thorough cleaning with a wax remover is the best way to begin this job.
- A lot of time and energy was spent on the mold so that the body work can be kept to a minimum. Our body shop has stated that any more than 40 hours of body work is unnecessary with the Mk V body.
- Allow the bodywork or repairs performed to sit for several days outside in the sun or at elevated temperatures to allow the repair materials to cure before final paint.

Chapter

5

Final Assembly

With the body at paint, the interior of the car can get worked on.

Carpet

- Razor knife, silicone, caulking gun, spray glue, brake cleaner or acetone.
- Interior trim/carpet (Box 11)
- The adhesive used to hold the carpet down is the same as we used on the dash pad. 3M® Super77™ or Super90™ work best.
- Be very careful spraying the adhesive once some carpet is mounted. Guard the carpet with masking tape or cardboard.
- Test fit each piece before gluing in place.

	17622	**BOX 11 MkV CARPET**		
1	17516	LEFT FOOTBOX OUTSIDE	1.00	EA
2	60562	LFT FTBX OUTSIDE TRIANGLE	1.00	EA
3	60561	LFT FTBX FRONT	1.00	EA
4	60560	LFT FTBX INSIDE	1.00	EA
5	17514	LEFT LOWER UNDERDOOR	1.00	EA
6	17789	LEFT UNDER DOOR TOP	1.00	EA
7	17521	LEFT FLOOR CARPET	1.00	EA
8	17511	LEFT REAR TOP OUTSIDE CORNER	1.00	EA
9	17783	LEFT REAR LWR OUTSIDE CORNER	1.00	EA
10	17517	RIGHT FOOTBOX OUTSIDE	1.00	EA
11	60583	RT FOOTBOX OUTSIDE TRIANGLE	1.00	EA
12	60579	RT FOOTBOX FRONT TOP	1.00	EA
13	17518	RIGHT FOOTBOX FRONT BOTTOM	1.00	EA
14	17519	RIGHT FOOTBOX FRONT RIGHT	1.00	EA
15	60578	RIGHT FOOTBOX INSIDE WALL	1.00	EA
16	17515	RIGHT LOWER UNDERDOOR	1.00	EA
17	17790	RIGHT UNDER DOOR TOP	1.00	EA
18	17522	RIGHT FLOOR CARPET	1.00	EA
19	17512	RIGHT REAR TOP OUTSIDE CORNER	1.00	EA
20	17784	RIGHT REAR LWR OUTSIDE CORNER	1.00	EA
21	60556	TRANS TUNNEL FRONT	1.00	EA
22	17520	TRANSMISSION TUNNEL TOP	1.00	EA
23	17513	TRANSMISSION TUNNEL REAR	1.00	EA
24	17510	COCKPIT REAR WALL	1.00	EA
25	17625	TRUNK FRONT TOP LEFT WALL	1.00	EA
26	17525	TRUNK FRONT LWR LEFT WALL	1.00	EA
27	17523	TRUNK REAR LEFT WALL MID TOP	1.00	EA
28	17623	TRUNK REAR LEFT WALL MID LWR	1.00	EA
29	17529	TRUNK REAR LEFT TOP WALL	1.00	EA
30	17626	TRUNK FRONT TOP RIGHT WALL	1.00	EA
31	17526	TRUNK FRONT LWR RIGHT WALL	1.00	EA
32	17524	TRUNK REAR RIGHT WALL MID TOP	1.00	EA
33	17624	TRUNK REAR RIGHT WALL MID LWR	1.00	EA

34	17530	TRUNK REAR RIGHT TOP WALL	1.00	EA
35	17527	TRUNK FLOOR	1.00	EA
36	17528	TRUNK RECESS	1.00	EA

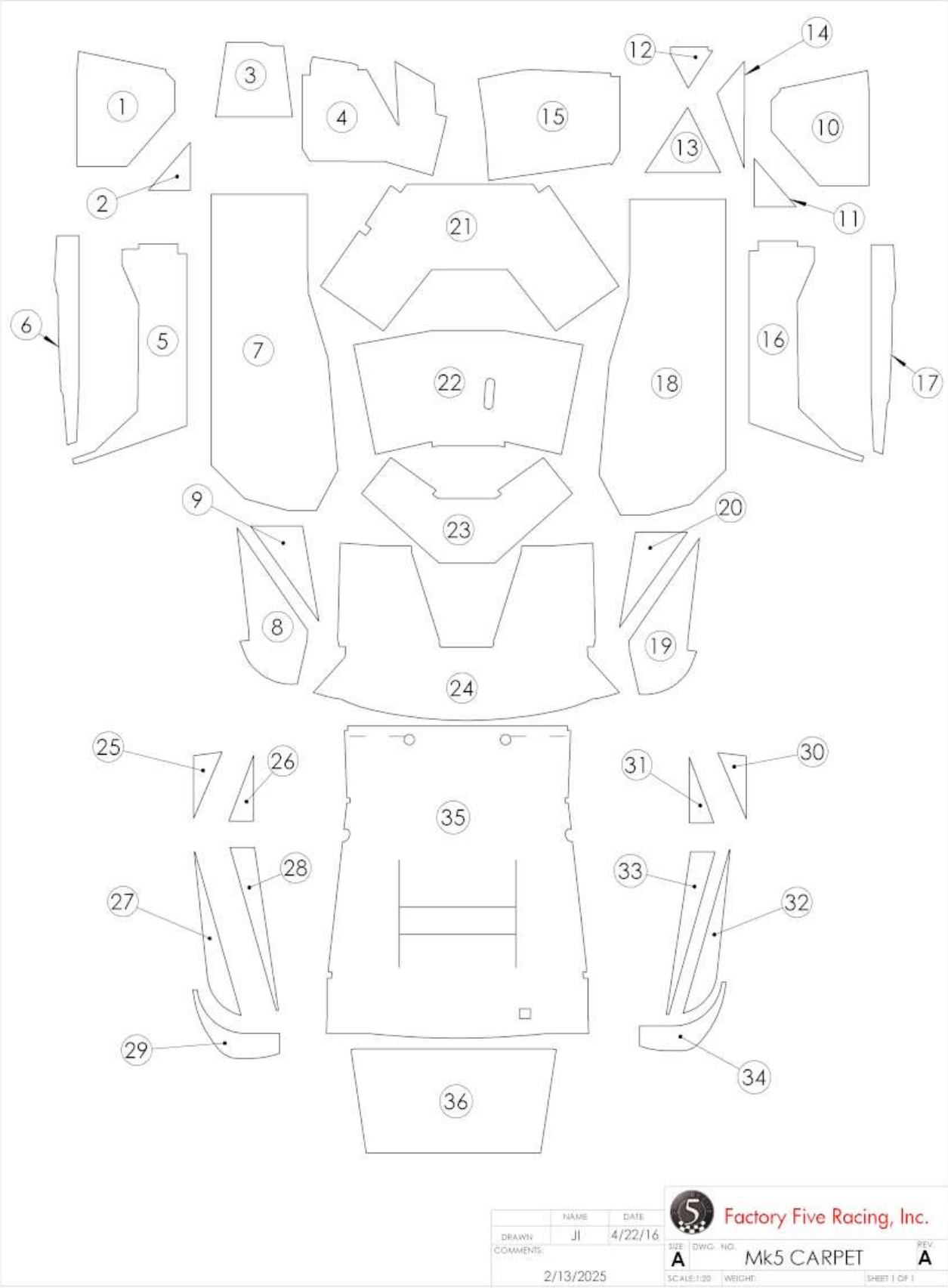

Wipe down the bare aluminum with acetone or brake cleaner for good adhesion.

Double check the aluminum edges and corners for any areas that look like they are not sealed. Run a small bead of silicone in these corners, seams and around the slots where the seat harness mounts poke through.

Start with the large rear cockpit wall carpet. Position it before gluing so you understand where it will go then, apply the adhesive and glue it into position.

✋ Be very careful spraying the adhesive once some carpet is mounted. Guard the carpet with masking tape or cardboard.

The cockpit rear corners go on next.

Do the transmission tunnel next starting with the back u-joint cover.

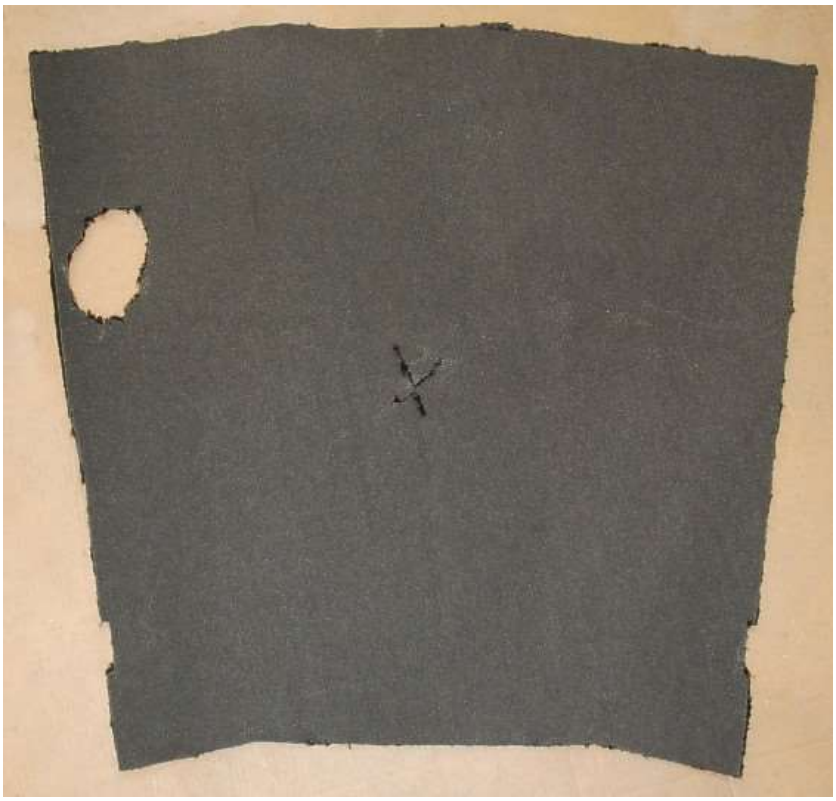

Test fit the main tunnel cover. While you are fitting cut the handle opening for the e-brake and shifter.

Glues down the tunnel top.

Glue the front transmission tunnel next.

In the right footbox, start with the inside panel first.

Fit and glue the front then the right outside footbox wall carpet section. The carpet tucks in behind the footbox protection tube. Taping off the tube helps prevent getting the adhesive on it.

Fit and glue the left side footbox outer carpet section. This piece also tucks behind the footbox tubing.

Fit and glue the lower floor sections.

Fit and glue the under-door piece.

✋ The side exhaust mount will get bolted through the floor using stainless button head bolts. If you would like to cover the bolts with the carpet, wait to install the floor pieces until after the side exhaust is installed.

The floors are next. They may also need a slight trim for the best fit. Glue them down and vacuum the carpet prior to the seats going in.

Install the trunk, tape the aluminum side walls, fuel strap and rollbar mounts so they do not get spray glued.

At the front, the carpet should go over the rollbar mounts and seat harness mounts.

Pull the license plate wires up next to the right-side rear rollbar leg.

Glue the rear side pieces of carpet next.

Glue the front side pieces of carpet

✋ We have found that in some areas where the carpet has been trimmed too much or in the top footbox areas, flat black paint can make great “carpet touch-up.”

Seats Harness

2” SFI approved seat harnesses with black latches.

3” Simpson SFI approved seat harnessed.

Both sizes of seat harnesses mount the same way

LAP BELT

🛠 ¾” wrench, ¾” socket, ½” drill bit, drill, ratchet
🚘 Seat Harness (Box 6), ½” x 1.25” bolts and nylon locknuts.

Unpack the seat harnesses and hardware.

Drill through the inner lap belt mount into the tunnel with a ½ in. bit.

Bolt the lap harness in position with the inner most nut inside the transmission tunnel.

Seat Final Install

Drill back up through your seat mounting holes to put holes through the carpet and re-mount the seats.

Seat Harness Shoulder Belts

🛠 Razor knife, ¾” wrench, ¾” socket, ½” drill bit, drill, ratchet

🚘 Seat Harnesses, Misc. electrical components (Box 4)

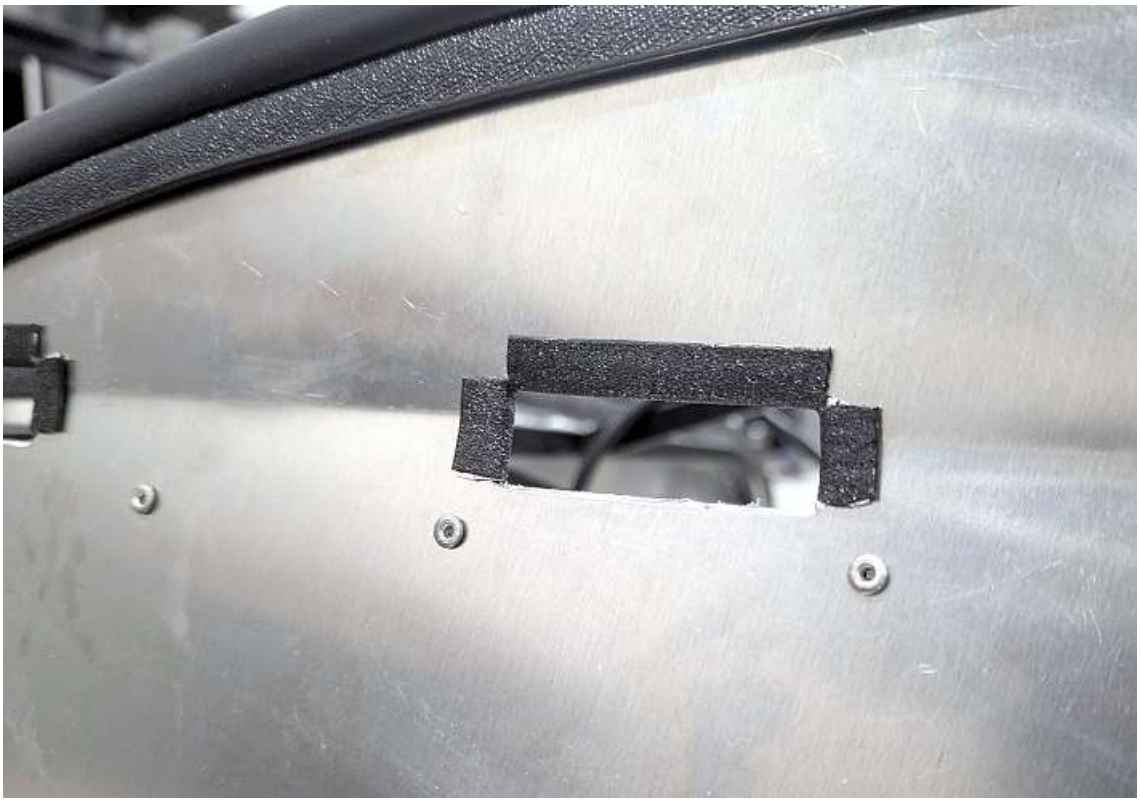

Use some of the edge trim from the electrical assembly to cover the edge where the harness passes through.

Cut the carpet with a single slit to allow the harness to pass through.

Remove the mounting tab and slider from the harness.

Slide the harness through the rear wall from the front. The shoulder harnesses are side specific so make sure you have the sides correct.

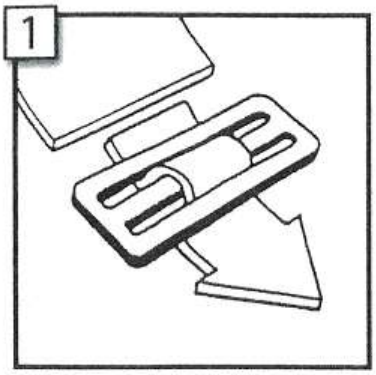

WEAVE STRAP THROUGH SLIDE BAR.

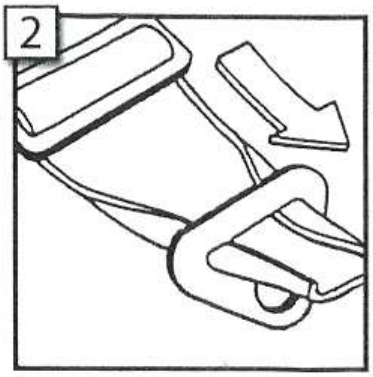

PULL STRAP BEYOND SLIDE BAR FOLDING EDGES. INSERT INTO FLOOR ANCHOR.

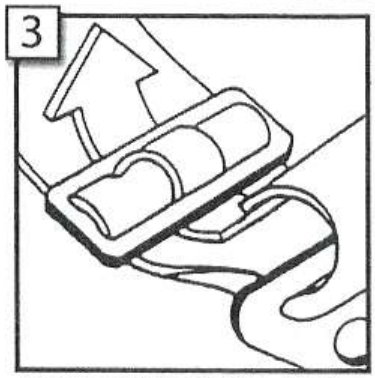

FOLD BACK STRAP AND RE-WEAVE THROUGH SLIDE BAR AS SHOWN.

Replace the slider and mounting tab and bolt the tab to the chassis.

Adjust the harnesses to where they fit you comfortably.

Shifter Handle and Boot

🛠 ½” wrench, $^{1}/_{8}$” drill bit, drill, Philips head screwdriver, marker, thread lock
🚗 Shifter handle components

Unpack the shift handle and bolt it to the transmission. These bolts tend to rattle loose so use a little thread locker.

Push the boot and trim rind down over the handle so it sits flush on the tunnel.

Using a silver marker or white paint marker, mark your screw holes on the tunnel.

Remove the boot and drill 1/8" holes in the spots you marked.

Re-install the boot and screw down to the tunnel with the countersunk screws. A small screwdriver can help to locate the holes.

Screw the two-piece knob onto the shift handle and tighten so the shift pattern is in the correct orientation.

Emergency Brake Boot

🛠 $^{1}/_{8}$” drill bit, drill, Philips head screwdriver
🚘 E-brake boot components (Box 6), (4) #8 x ¾” Oval head sheet metal screw.

Unpack the e-brake boot and screws from the fastener pack.

Fit the boot over the handle and check the handle actuation. When you are in a position where the boot clears the handle movement drill through the material into the tunnel and screw it into place.

Before body mounting

Once the body is back from paint, the following parts can get installed on the body before it is mounted since it is easier to do so.

Headlights

🛠 Philips head screwdriver
🚗 Headlight components (Box 6)

Unpack the headlight mounting assembly.

13420

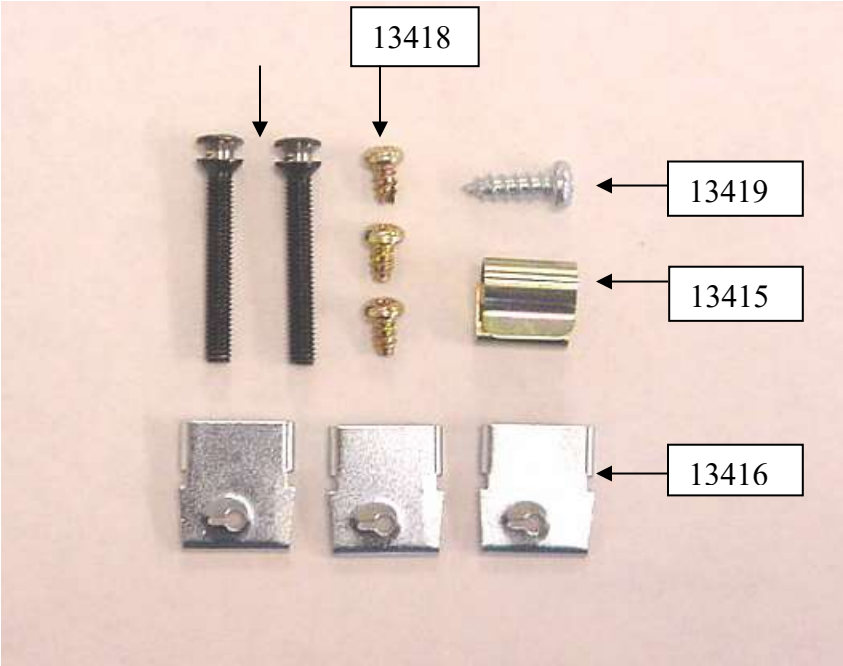

Headlight fasteners.

Screw the adjuster screws about halfway into the buckets.

Push the grommet into the side of the bucket.

Run the light plug harness through from the inside

Line up the headlight with the bucket to get the proper orientation. The bottom of the bucket is the only screw boss that comes in from the side and the writing on the headlight should be right side up.

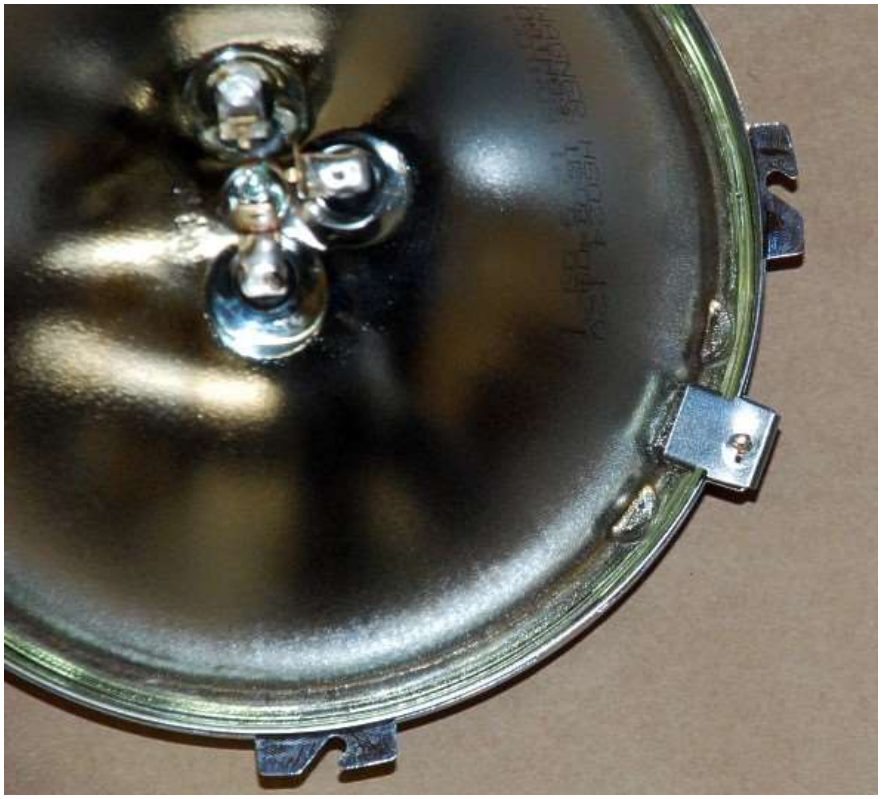

Screw the mounting flange onto the light with the 3 small tabs and small screws. The tabs are bent to fit around the bosses on the light.

Put the gasket on the bucket with the adjuster bosses poking through the 2 larger holes.

Screw the bucket to the body using the screw that came in the mounting assembly.

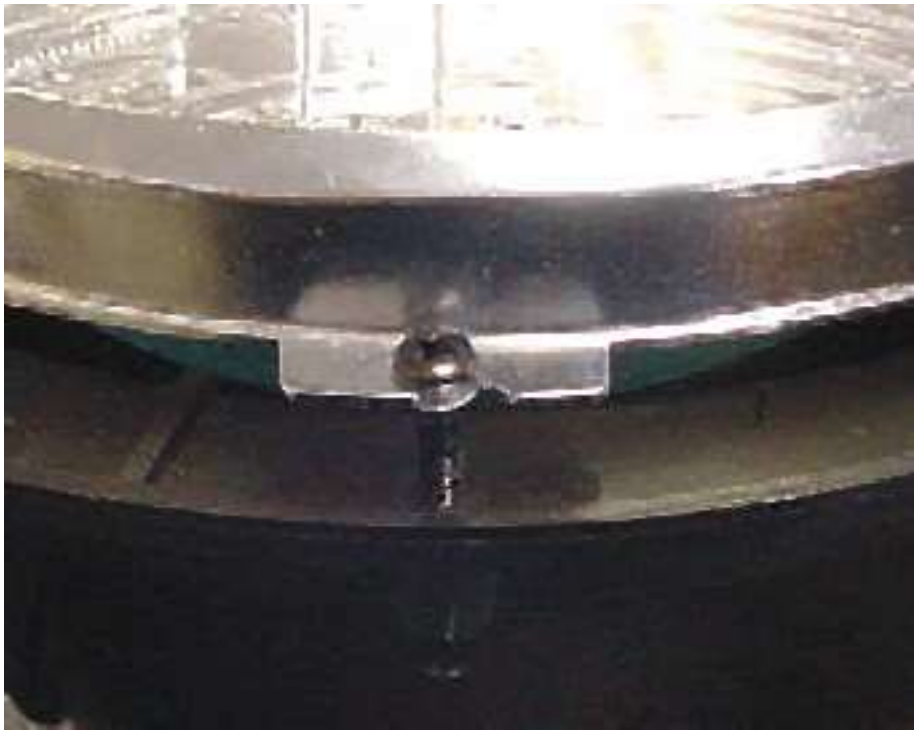

Plug the light into the connector and mount the bulb to the bucket. The slotted parts of the mounting flange go onto the adjusting screws between the screw head and flange.

Push the spring clip onto the boss near the bottom of the bucket.

Mount the trim ring hooking it over the bucket on the top and screwing it into the bottom using the countersunk screw.

Turn Signals

🛠 $^{5}/_{16}$" deep socket, ratchet
🚘 Amber front turn signal lights

Mount the turn signals to the body being careful not to over tighten the locknuts.

Tail lights

🛠 $^{5}/_{16}$” deep socket, ratchet
🚗 Red rear lights

Attach the rectangular tail lights to the body.

Gas Cap

🛠 Philips head screwdriver
🚗 Aston Lemans Cap

Unpack the fuel cap and mounting hardware.

Put the gasket on the bottom surface of the cap.

Set the cap on the body and screw in using 5 of the countersunk screws. Leave the inside most forward hole open.

The one remaining cap fastener is a longer screw and nut used for the ground strap, screw it in from the top then put the ground strap washer and nut on from underneath.

Side Louvers

🛠 Silicone, caulking gun, duct tape

Side Louvers (Box 10)

Unpack the side louvers.

If you would like to polish the louvers, it is a lot easier to do this before bending.

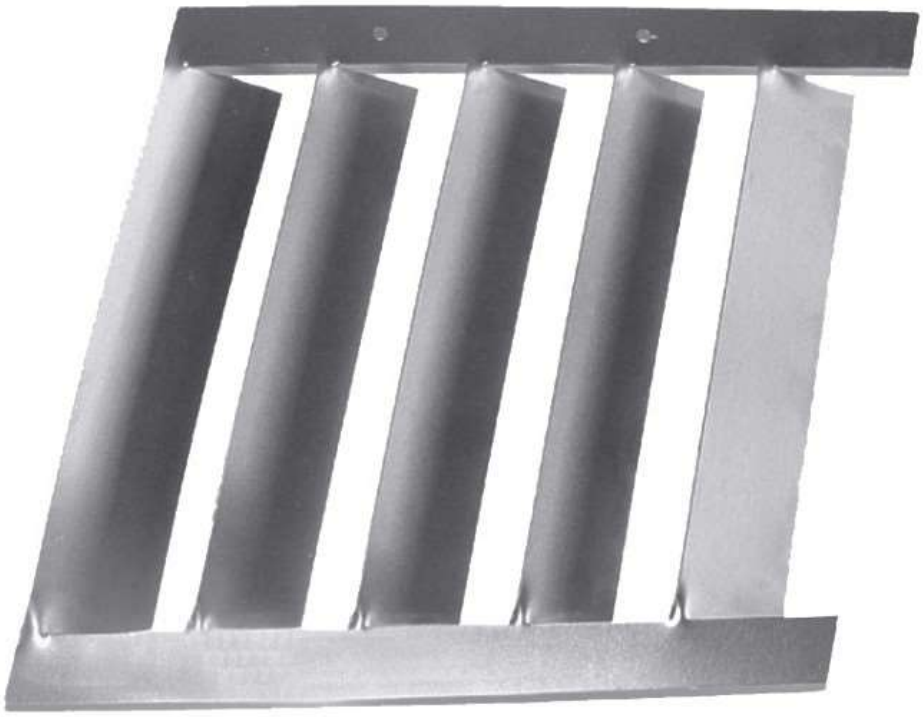

Holding the top and bottom flanges, bend the fins in so they are roughly at a 45° angle.

Hold them up to the body to see how they fit. They are designed to allow air to exit the engine bay so the flanges point from the rear edge in.

Apply silicone down the top and bottom flange on the side facing the body.

Line up the louvers and tape them in place to hold them until the silicone dries.

Weatherstripping

🛠 Razor knife, tin snips
🚘 Secondary body fasteners (Box 4)

If you have not already run the bulb seal up the sides and rear of the trunk and bolt the trunk hinges back in place and tighten.

If you removed any of the other weatherstrip on the firewall or hood support tubes replace it now.

When you are ready to final mount the body, unpack the expanding foam and run a small section up the outside of each footbox just forward of the door hinge.

Final Body Mounting

Fit the body back on the chassis. Be very careful with the sides and slowly work it down into position. Pull the sides out around the chassis and make sure the body covers the rear cockpit wall and top of the dash without pulling the material off either.

Re-mount the body in the rear with the quick jacks or bumpers.

Re-mount the nose with the bolts.

Hood mounting

Rivet the scoop back in position on the hood.

Re-install the hood latch plates and replace the bumpers you used before on the body to line up the hood.

Re-Install the hood and latches.

Radiator Aluminum

🛠 Drill, ¼" Nut driver, ⅛", $^{3}/_{16}$" drill bits, rivet tool, floor jack, marker, ruler, silicone, caulk gun.

🚘 Secondary body fasteners, engine bay aluminum.

✋ Use care when handling aluminum, the edges are sharp and can cut you.

The radiator and its plumbing were installed before the body was mounted. The radiator is being held up at the bottom by a couple of zip ties through a quick jack bumper hole.

Use a floor jack under the radiator to hold it in place.
Cut and remove the zip ties.
Mark the radiator aluminum for either screws or, rivets for a cleaner look (attach every 2” if using rivets).

Push weatherstripping onto sides of the aluminum.

Curl the radiator aluminum up and pass it through the nose.

Position the radiator aluminum so that it goes under the body lip and goes across to the bottom of the radiator. Clamp the floor piece to the nose.

Attach the radiator floor piece to the bottom of the radiator with a couple of self-tapping screws on the marks or use a couple of clamps.

Drill, silicone and rivet the radiator floor aluminum to the bottom radiator lip.

Silicone and rivet the aluminum to the nose lip using three $^{3}/_{16}$" rivets.

Rollbar mounting

A popular option are the Roll bar grommets. If installing them, slide them onto the rollbar and leg now.

Re-mount the roll bar through the body. Make sure that the rear leg is in the correct orientation so that your holes will line up.

Interior Rearview Mirror

🛠 Philips head screwdriver.
🚘 Rearview mirror (Box 6), #8 x 1.50” Oval head screws.

Screw the interior rearview mirror back in place using the $^{5}/_{8}$” spacers and screws.

Re-position the windshield.

Make sure that the windshield does not hit the body on any side, if necessary, file the hole bigger.

Put the rubber base plate gasket around the side bar and make sure the rubber does not go up onto the windshield bottom wipe. Trim the base plate gasket if necessary.

From the top, slide the base plate down to the body.

Make sure the base plate sits flat on the gasket, if it hits the side bar on the ends, file and angle on the end of the base plate.

Use a $^{3}/_{32}$" drill bit through the base plate holes for the mounting screws.

Remove the base plate and silicone in the slot around the windshield.

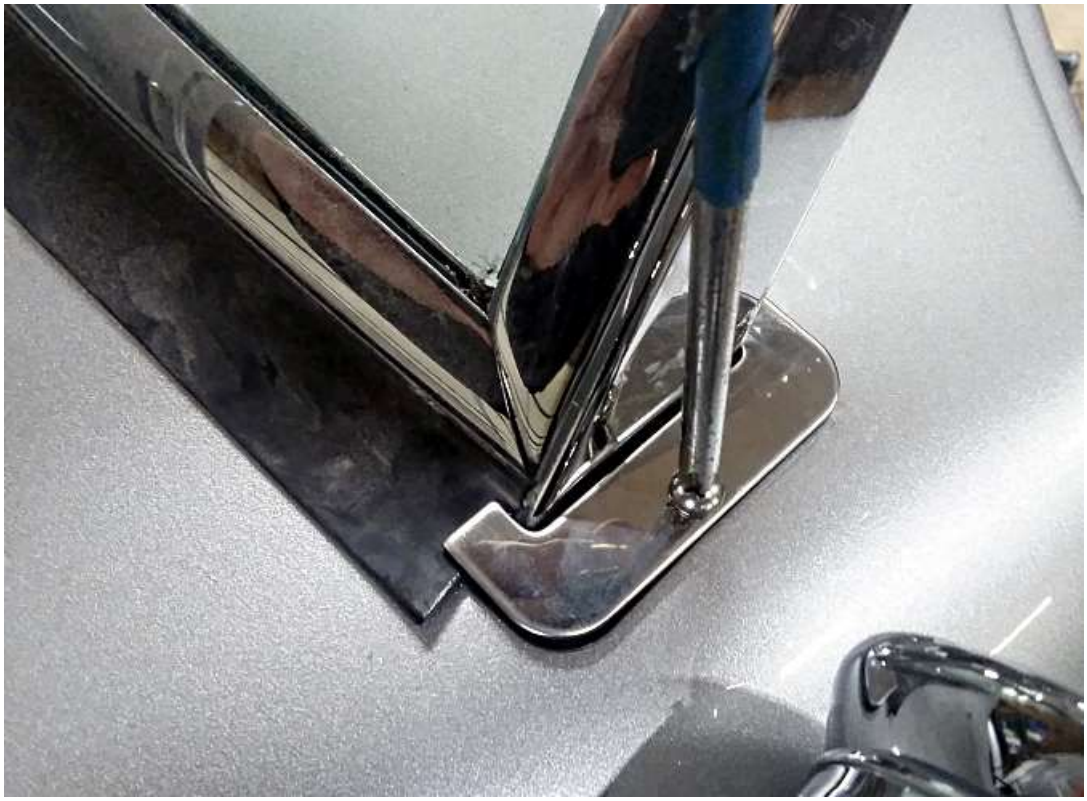

Remount and screw the base plate to the body using the #6 x ½” Truss head screws.

Door and Latch mount

Reassemble the door latch and cover to the door frame.

Reattach the doors.

Repeat assembly for the opposite side of the car.

Fuel Filler Neck

🛠 Razor knife, ⅜” socket, ratchet, $^{3}/_{16}$” drill bit, drill
🚘 Aston Lemans Cap components

Ground the fuel filler strap to the chassis using the screw that came in the cap hardware.

✋ This wire prevents any static charge build-up and must be used.

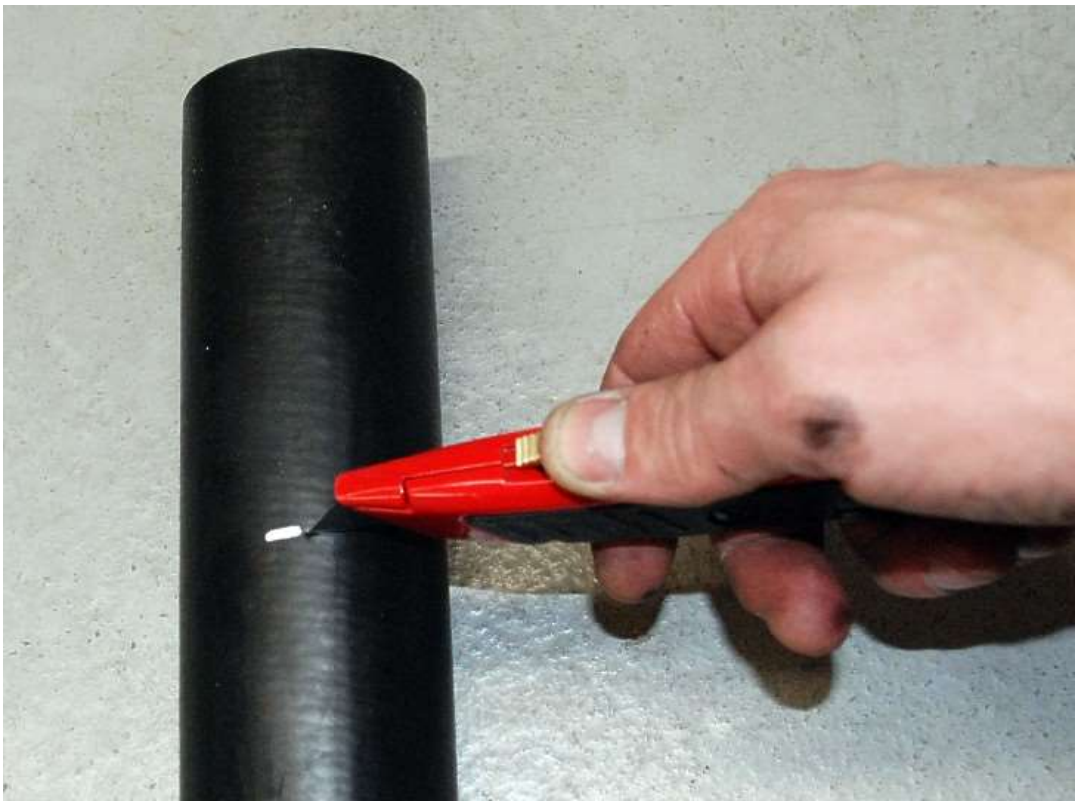

Unpack the fuel filler neck hose and cut a 5” long section out of one end.

Install the hose between the filler neck and gas cap with the clamps that came in the cap hardware.

Screw the plastic gas cap into the Aston Lemans style cap.

Fuel tank access covers

1/8" drill bit, drill, rivet gun, silicone, caulking gun

Secondary body fasteners, packaged aluminum

Silicone and install the patch panels in the trunk that cover the fuel sender and pickup access holes.

Final Trunk Mounting

Tin snips, 3/16" hex key

Secondary body fasteners

Push the side mount weatherstrip on the trunk opening starting at the bottom next to the latch pin hole and working all the way around just leaving a small gap for the head of the latch pin bolt.

Re-mount the license plate light and trunk handle.

Re-mount the trunk to the hinges and re install the latch pin.

Side Mirror

5/16" wrench

Rearview mirrors/fasteners.

✋ Only a driver side mirror is included with the kit. A passenger side one is available if desired.

Put the gasket on the bottom of the mirror so the holes line up with the threaded hole locations.

From the underside of the body, use a $^{5}/_{16}$" socket to attach the mirror to the body.

Light wiring

Wire strippers, wire crimpers, chassis harness instructions

Headlight components, amber front turn signal lights, rear lights, license plate light, electrical system completion components

Headlight

Wire in the headlights to the chassis harness. On the headlight, there are three wires, black is ground, white is high beam and the red is low beam.

Front turn signal

Wire the turn signals up to the chassis harness.

	Lamp	Wiring Harness
Ground	Black	Black
Turn	Green	Dark Green (Left)/Light Blue (Right)
Running	Yellow	Tan

Taillights

The tail light converter is not used with the column turn signal switch.

	Adapter	Wiring Harness
Ground	White	Black
Tail	Brown	Tan (Tail Lt. Feed.)
Left Turn	Yellow	Yellow
Brake	Red	Purple
Right Turn	Green	White

The tail light is both the stop and turn signal the tail light convertor must be wired into the harness, do this under the dash.

On the light, the white is the ground wire and the black is the running light wire.

	Lamp	Wiring Harness
Ground	White	Black
Stop/Turn	Red	Yellow (Left)/White (Right)
Tail	Black	Tan

Wire the license plate light.

Check straps

$^{3}/_{16}$" drill bit, drill, rivet tool, marker
Secondary body fasteners, door components

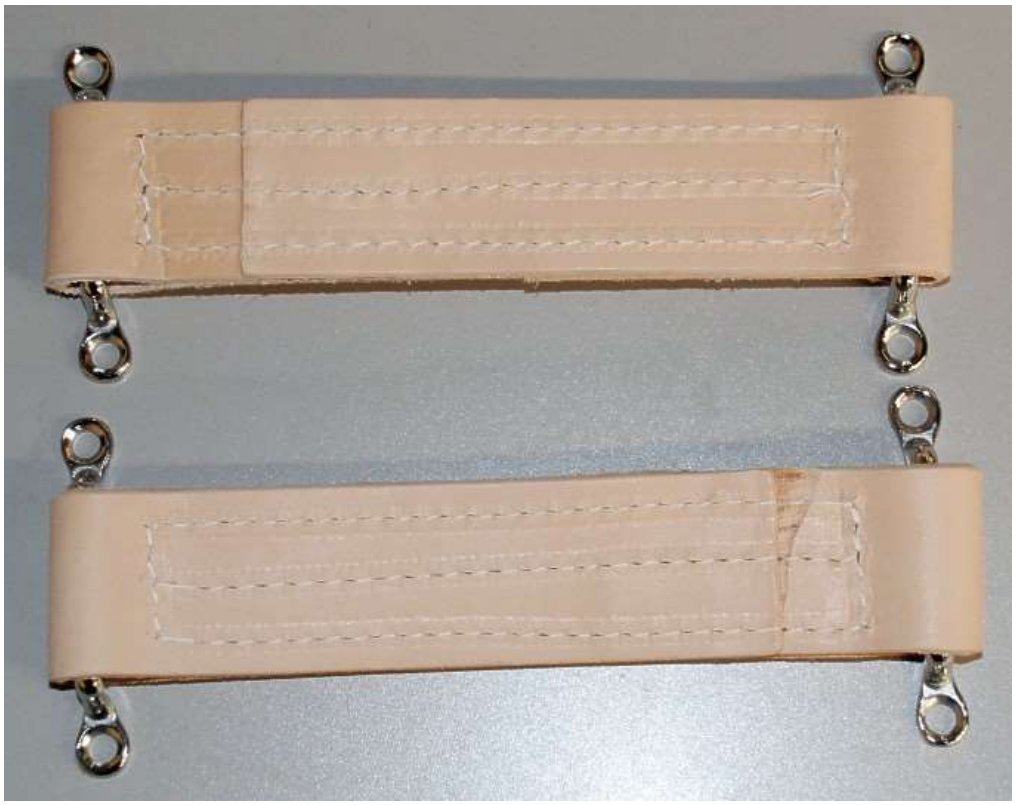

Unpack the door check-straps.

Rivet the check-strap to the door hinge using a $^{3}/_{16}$" rivet.

Open a door wide but not enough so that the door hits the body. The straps will stretch slightly over time so allow enough room for this by closing the door slightly from the maximum.

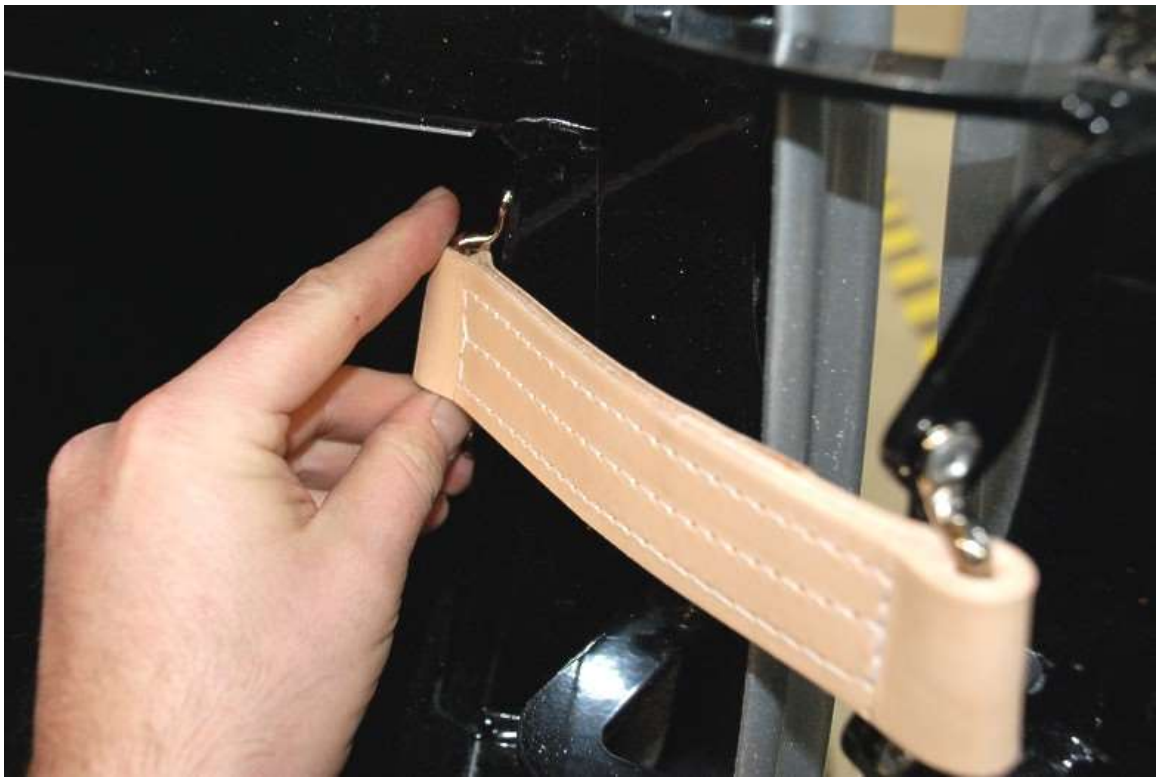

While holding the door open, pull the check strap tight and mark the location of the mount holes on the inside face of the 2”x 2” tube.

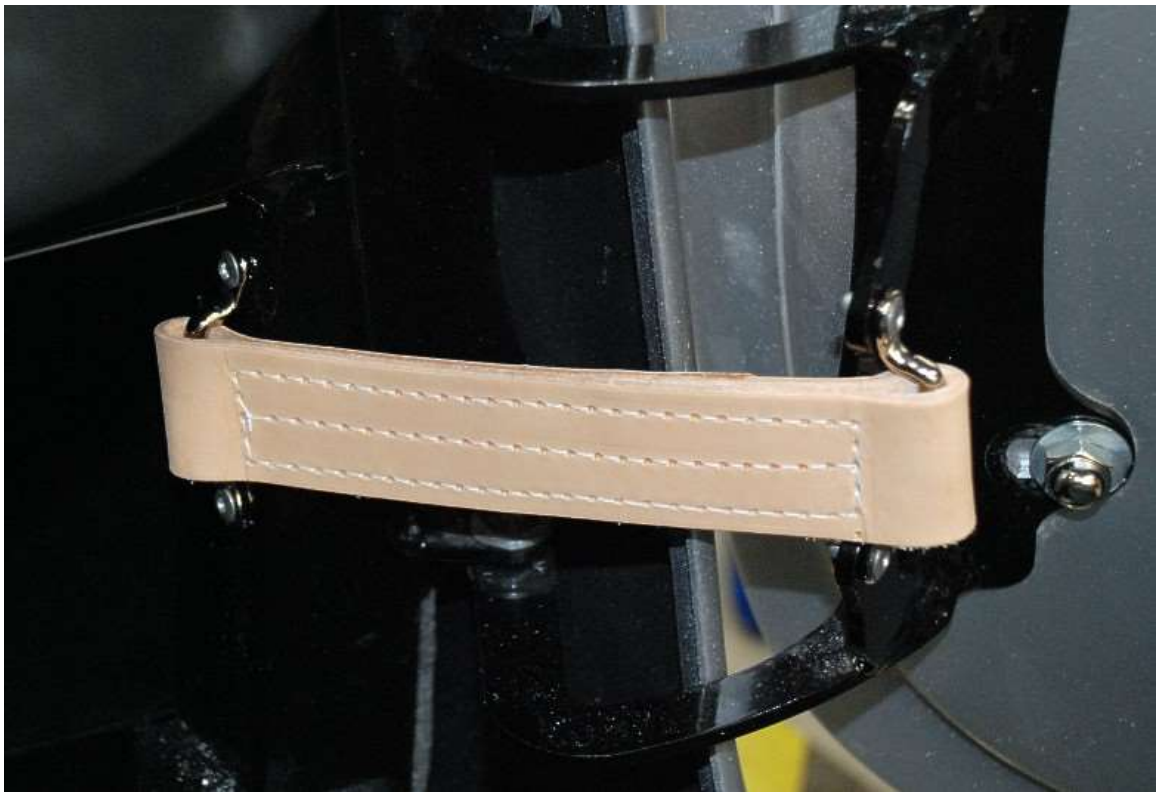

Drill $^{3}/_{16}$” holes at the marked locations and rivet the mount to the chassis.

Under door Aluminum

🛠 Drill, $^{1}/_{8}$” drill bit, rivet tool, silicone, caulking gun, spray glue, tin snips.
🚘 Packaged aluminum, interior trim/carpet, secondary body fasteners.

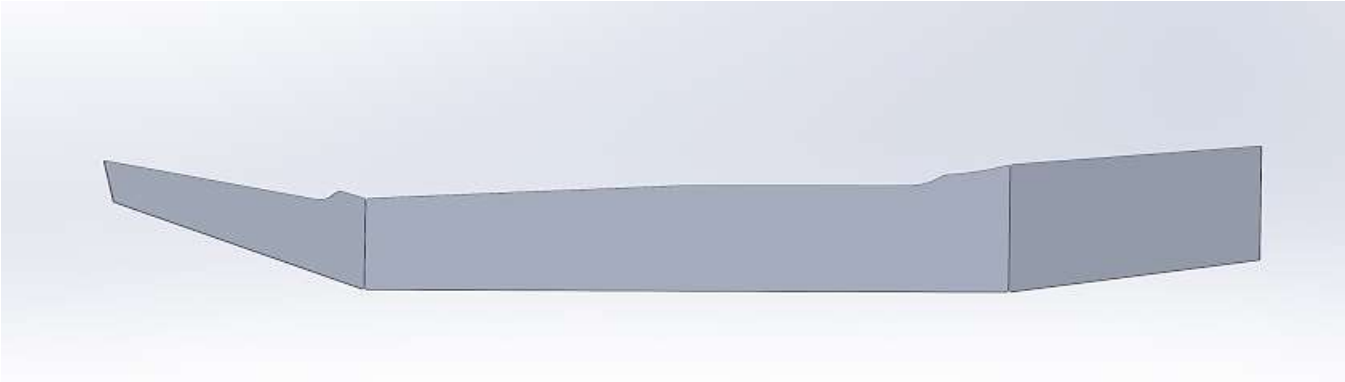

Unpack the under-door aluminum panels. They are shaped to fit under the door with flanges to mount to the chassis.

Push weatherstrip onto the wavy side of the panel.

Start at the back near the striker and put the weatherstrip bulb under the body flange then push it up to the striker so that the middle sits on the frame tube.

Push the panel out and hold in place with a couple sheet metal screws.

Silicone and rivet the panels in place.

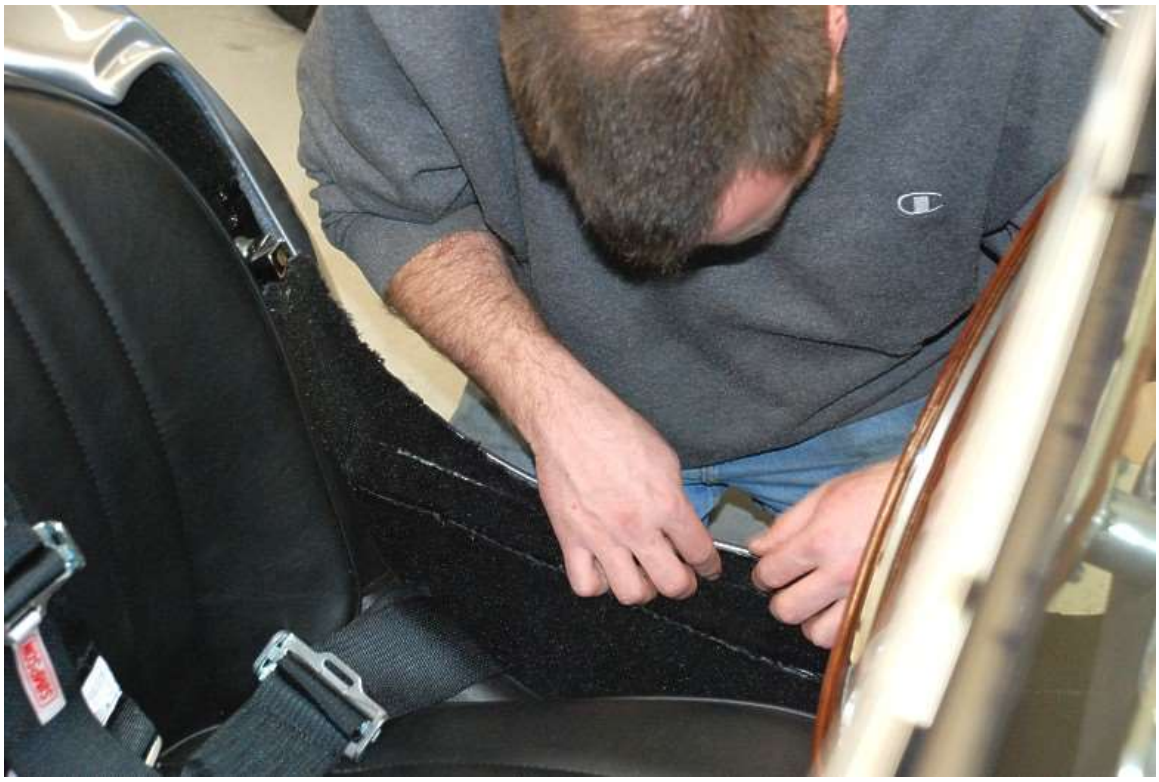

Test fit and then glue in the remaining carpet sections under the doors.

Cut a section of the large C channel weatherstrip to fit from the bottom of the door hinge to the door latch and push it in place over the body, aluminum, and carpet to finish the edges off. The barb side goes towards the inside of the car.

Gauges and Dash

- Tin snips, pliers, spray glue, brake cleaner, razor knife, drill, $^{1}/_{8}$", $^{3}/_{16}$" drill bit, silicone, caulking gun, rivet gun, wire crimper, wire stripper, Philips screwdriver.
- Gauge set, dash electrical components, cut dash, packaged aluminum, Interior trim/carpet box, electrical system completion components.
- Factory Five has a padded vinyl dash with glovebox and a Carbon fiber dash available as an option for use with the Vintage gauges.
- The factory Five Vintage gauges have built-in indicator lights so the large dash mounted ones included are not necessary.
- The dash should be installed after the body to make sure you have access to the screws.

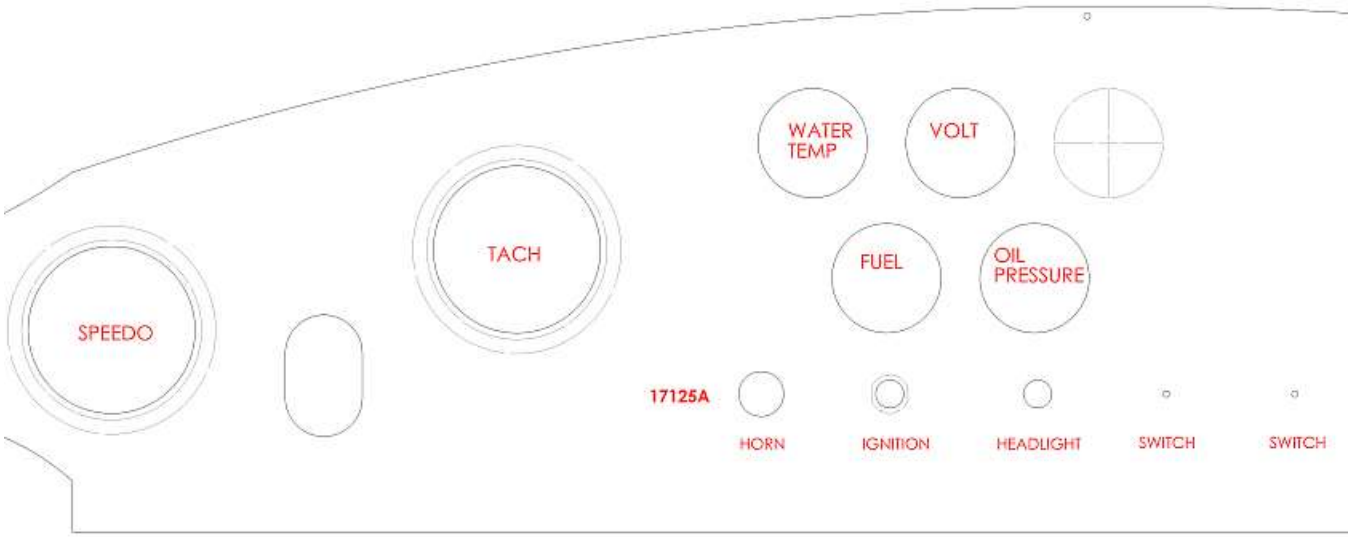

Standard gauge layout

✋ The extra cut $2^{1}/_{16}$" top right location is for the FFR gauges or an additional gauge such as a clock or oil temp gauges if desired.

Unpack the dash, dash cover and the gauges.

Dash prep

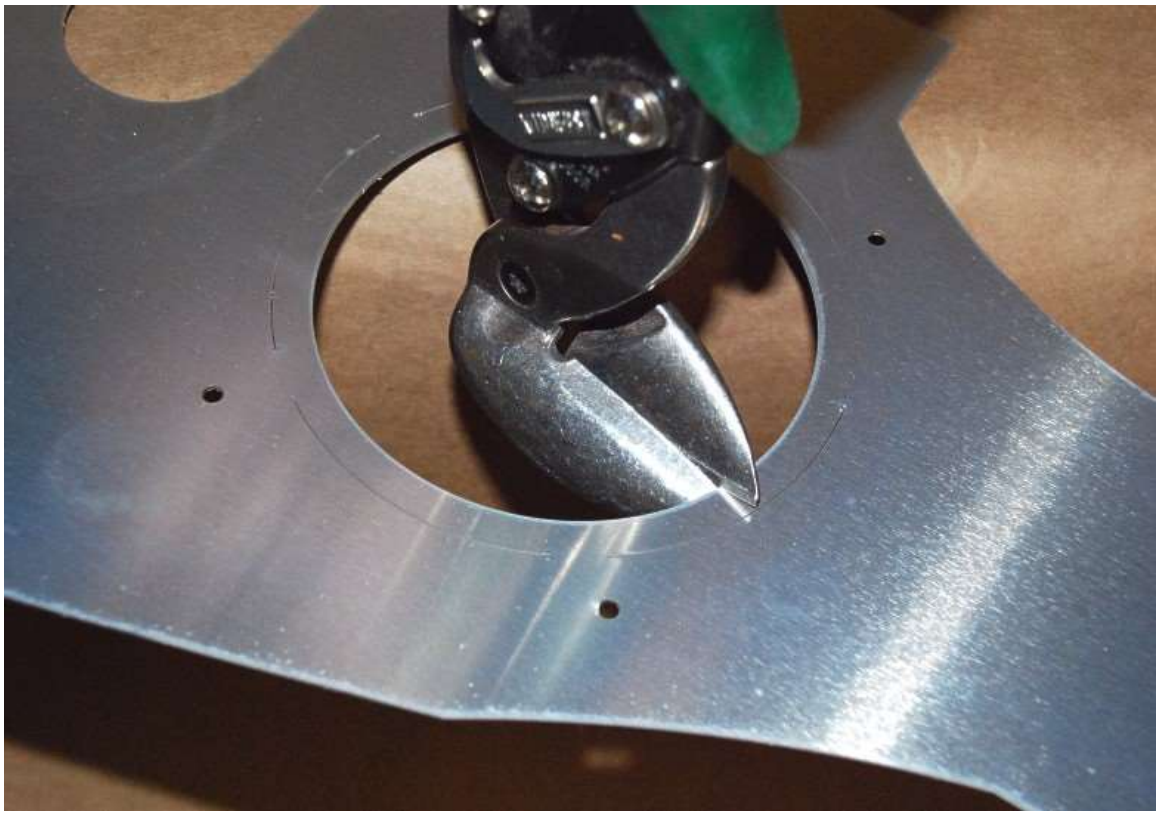

Depending on which gauges you are using you may need to open the dash holes for the tachometer and speedometer. If you need the larger holes the take a tin snip and cut through from the smaller hole to the tracing for the larger one halfway between all the tabs.

Take a pair of pliers and snap the tabs off to get the larger opening.

If you would like to install the three lights that are included in the kit, one possible layout is like the original Roadsters, positioned directly over the steering column in a straight line. Use a ½" drill bit for the holes.

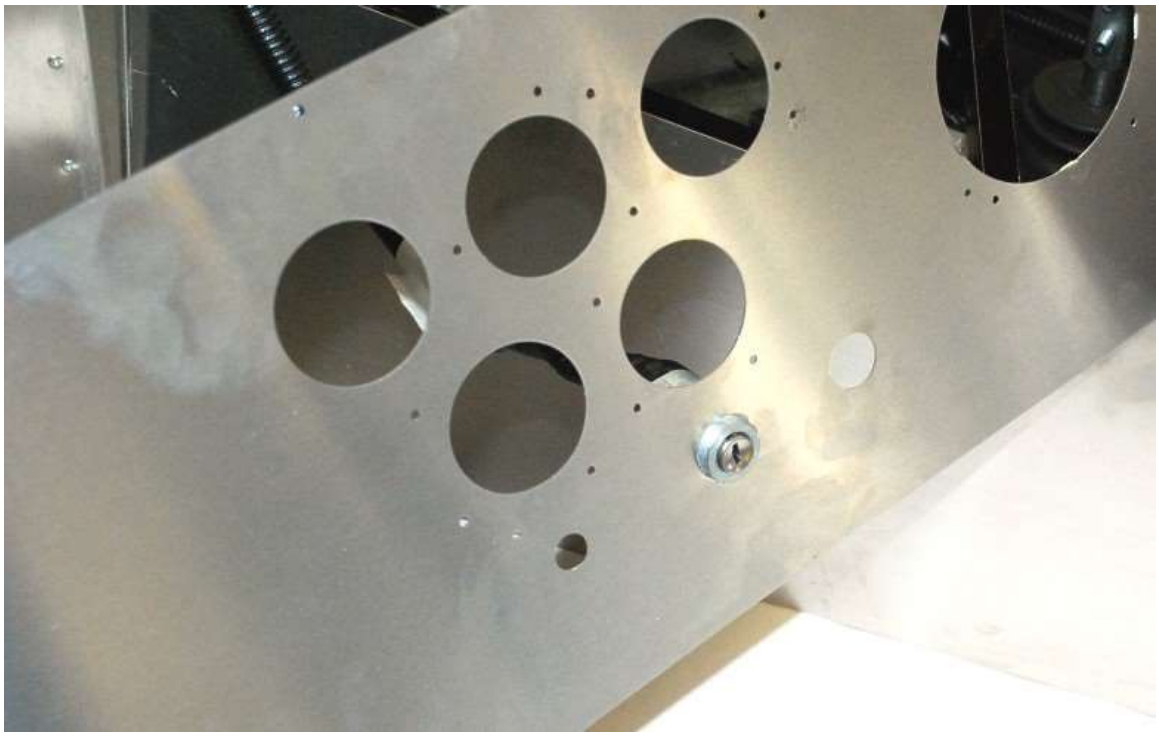

The ignition switch hole also needs opening up the same way, file the hole smooth and test fit the switch.

Clean the dash off with some brake cleaner or acetone and spray the front surface and the back surface of the dash pad with adhesive. (3M super 77 or super 90 work great).

Stick the dash to the pad leaving about an inch border all around the top, the bottom will be bigger for the flange. Taping the ends of the pad helps to keep it flat.

After giving the front adhesive time to set spray the bottom flange and pad and adhesive them together. This is a tight corner so hold the dash in position with pressure on the mating surface with some full paint cans or something else heavy. Steel parts shown are not part of the kit.

Cut the dash pad in angle shaped cuts every 2” (even closer in the corners) up to about ¼” from the dash.

Wrap the dash pad around to the back and glue it. Use some heavy books to hold the pad in place until the adhesive has a chance to dry.

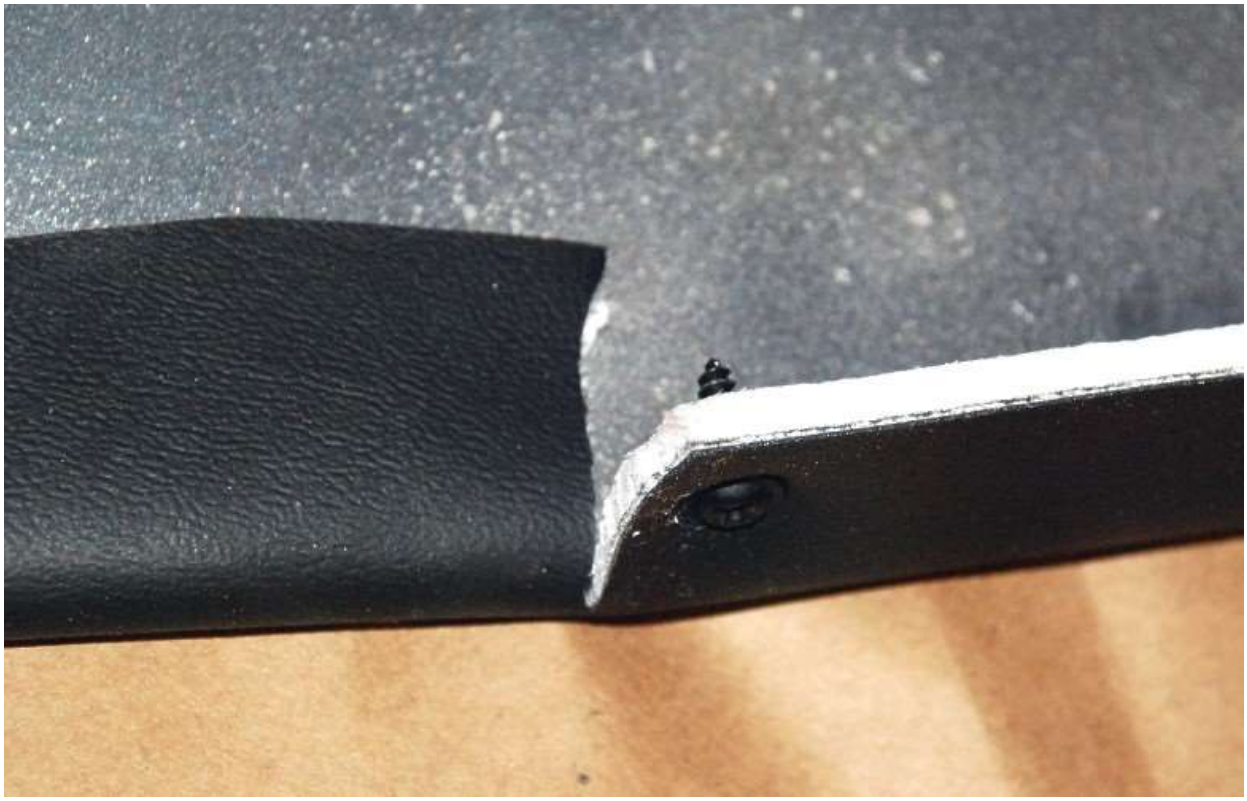
If you are having trouble getting the pad to stick on the bottom of the dash you can screw the corners down using some of the #6 x ½” black washer head screws provided with the dash hardware.

Using a razor knife, cut the gauge holes and switch holes out of the dash pad, cut the holes in from the aluminum about 1/8”. DO NOT cut out the steering shaft hole.

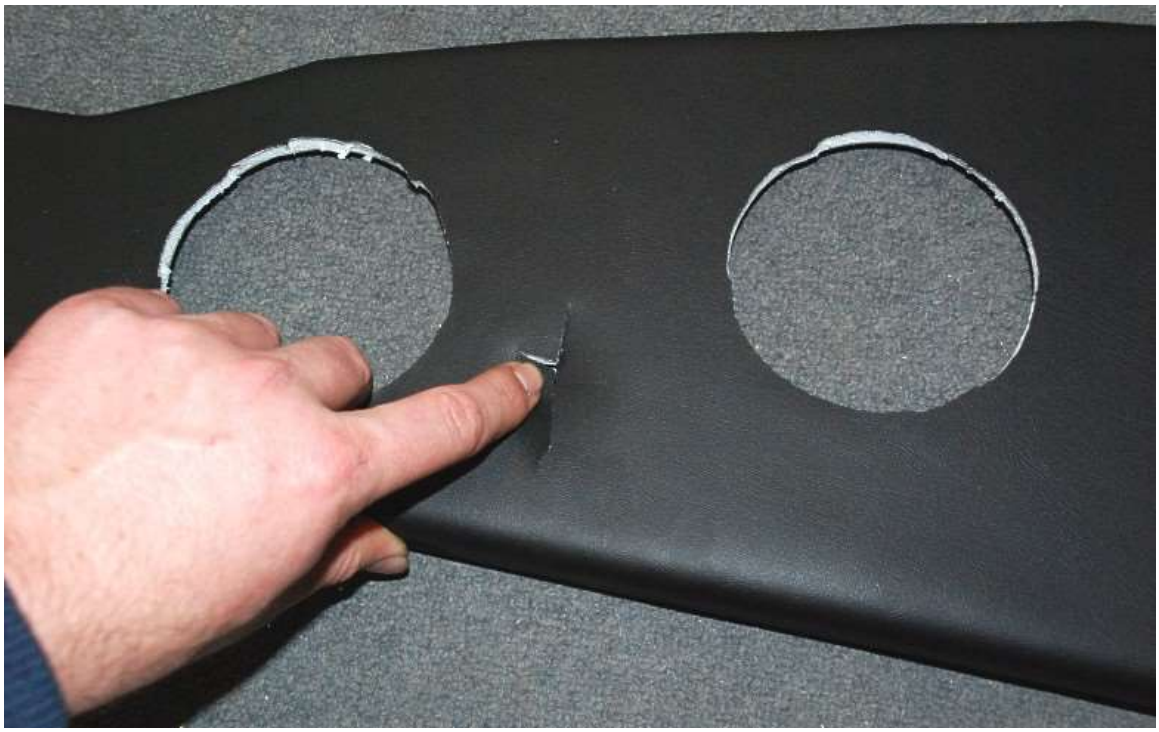

Using the razor knife cut a “+” sign pattern into the middle of the steering shaft hole.

With the dash lying face down on a clean tabletop, bend the edges of the dash down 1.25” in from the ends so they are at a 45° angle.

Gauges

Install the gauges in the dash.

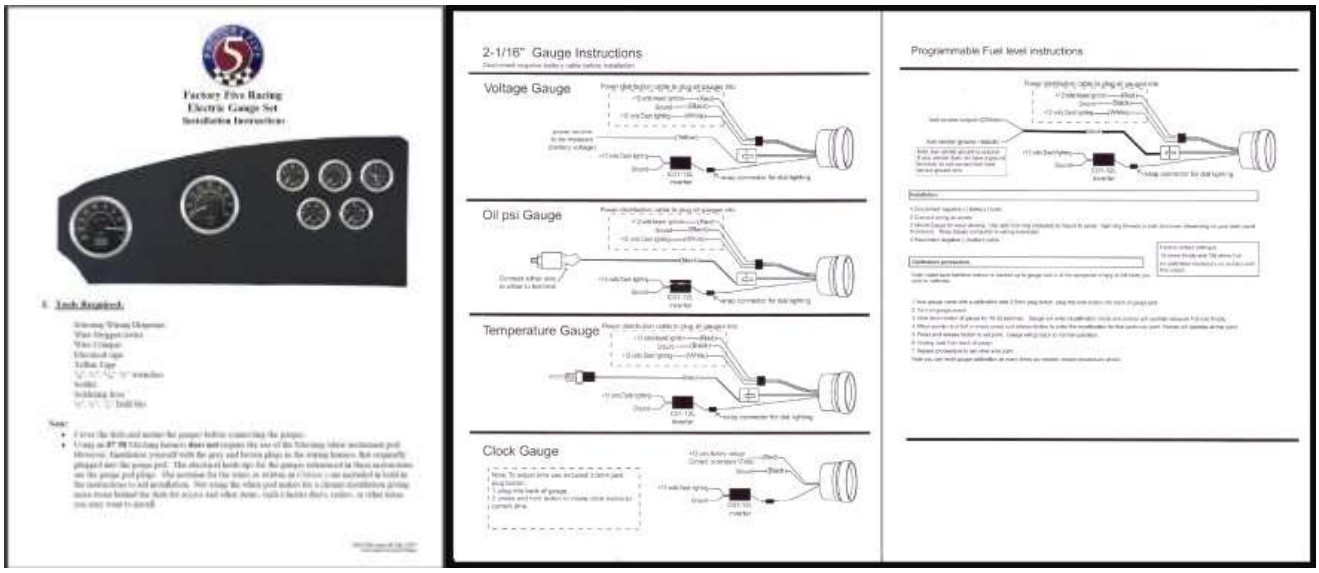

Wire the gauges according to the instructions provided with them and with the dash section of the chassis harness.

✋ Depending on the kit purchased, the kit will come with different buttons and switches.

Base roadster switches and horn button.

Complete kit switches and horn button.

Base kit switches

Install your switches and horn button.

Complete kit switches

Horn Button

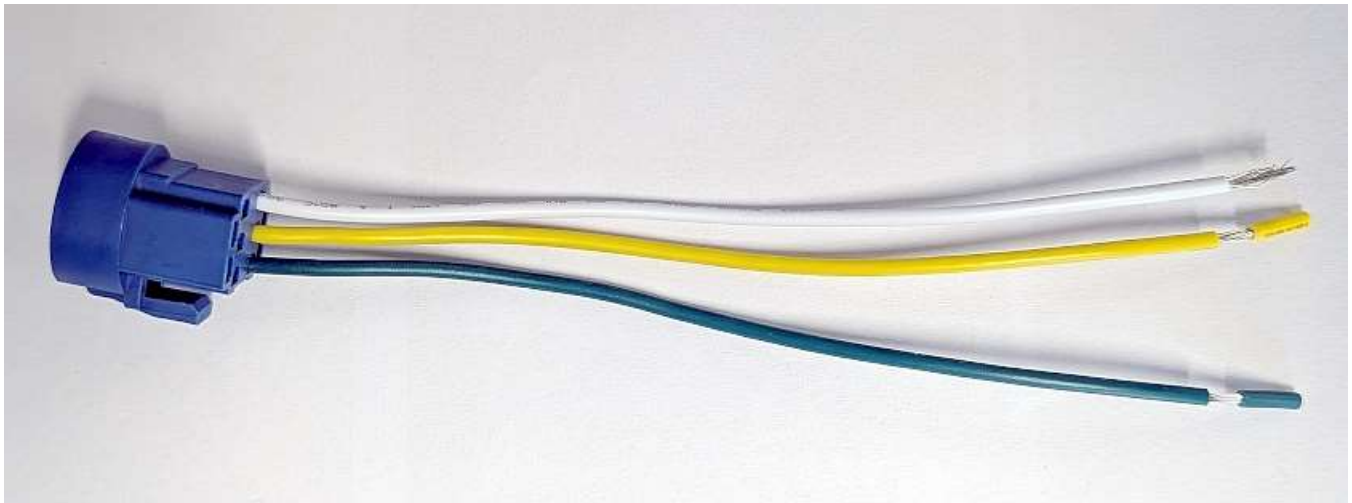

Locate the three-wire horn button connector pigtail.

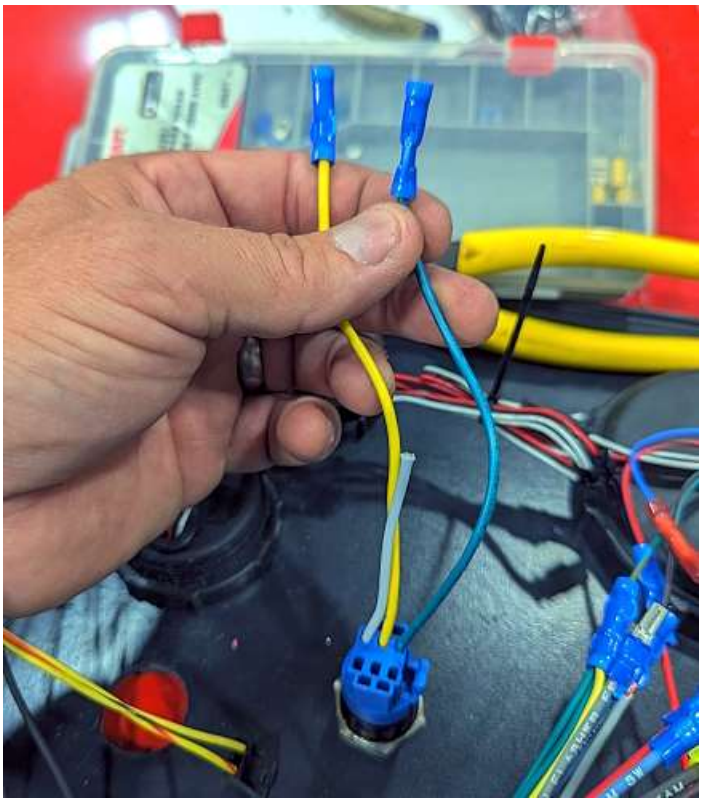

Connect blue butt connectors to the yellow and green wires. The white wire is not used.

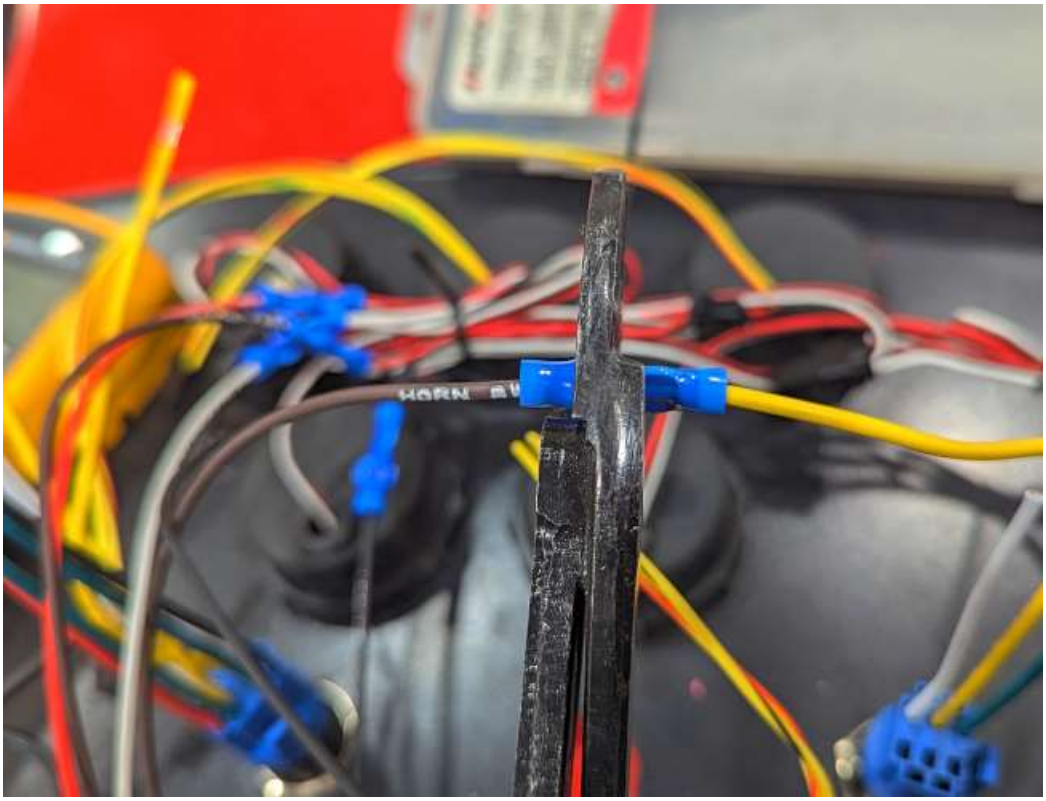

Connect the yellow wire to the brown dash harness horn wire.

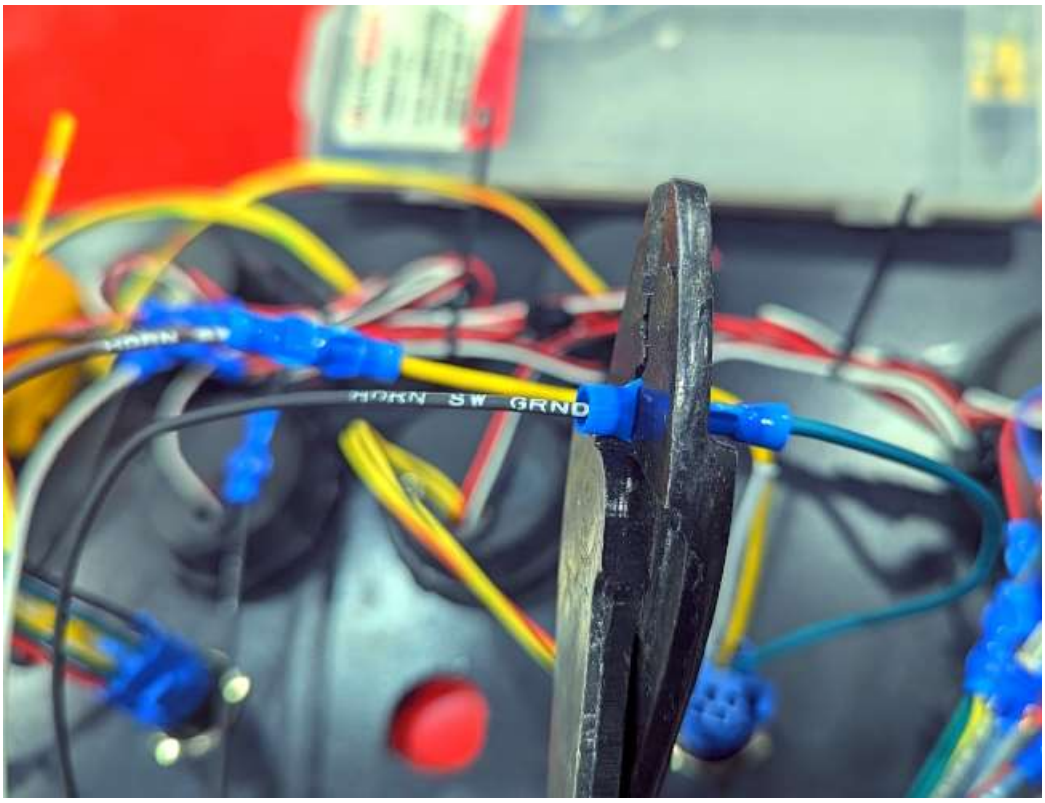

Connect the green wire to the black horn ground wire.

High/Low Beam headlight switch

- A high/Low beam switch must be used or the headlights will not work.
- This switch can only be used with LED headlights.
-

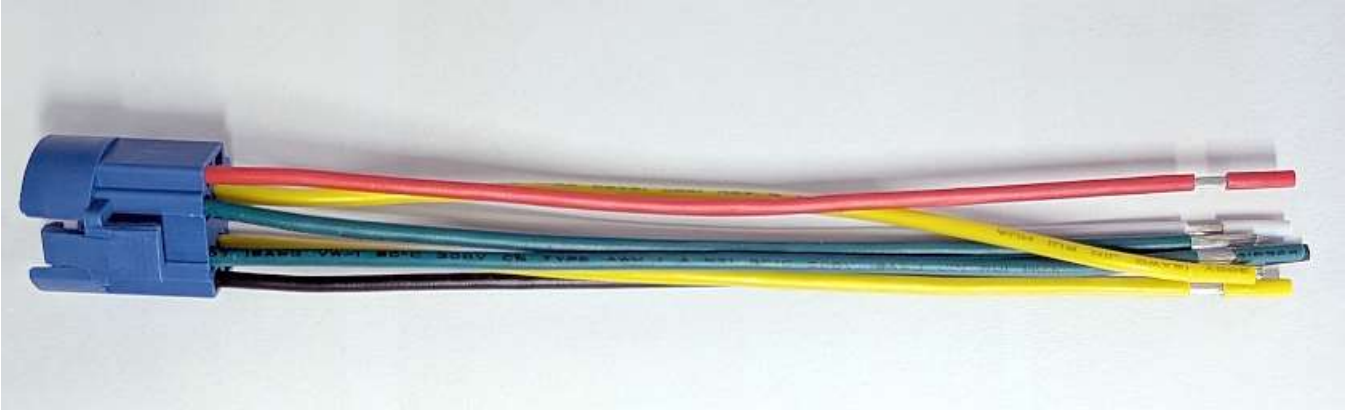

Locate the High/Low beam switch multi wire connector pigtail.

RED	HIGH BEAM SWITCH LIGHT POWER
BLACK	SWITCH LIGHT GROUND
GREEN	POWER FOR SWITCH
WHITE	CONTACT IN UNPUSHED POSITION "LOW BEAM"
YELLOW	CONTACT IN PUSHED POSITION "HIGH BEAM"

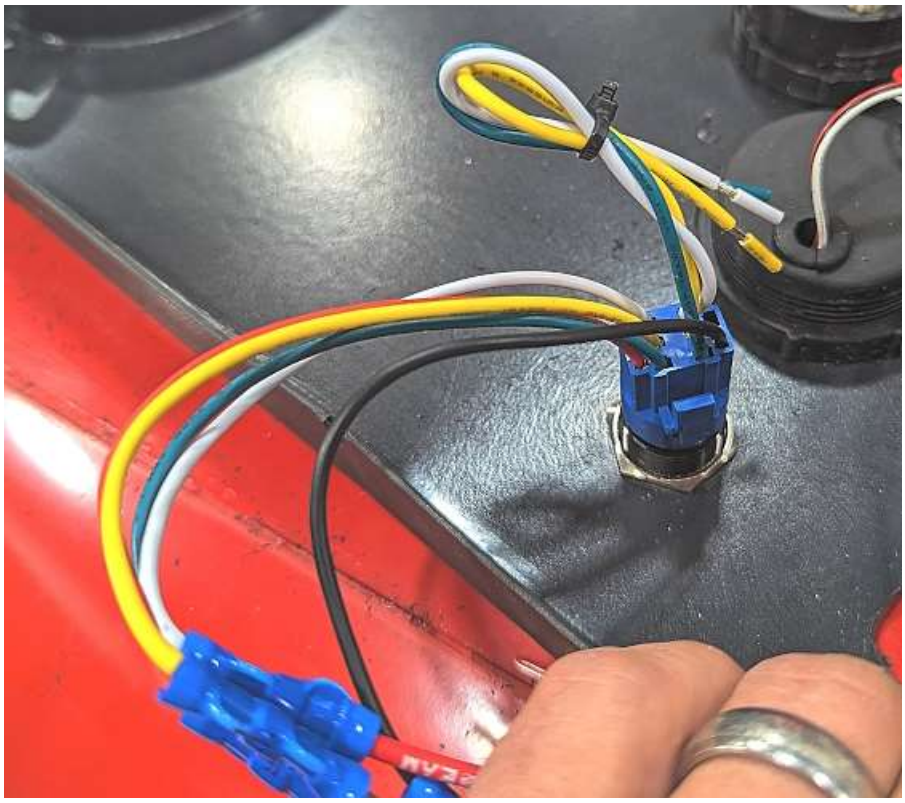

Only one side of the switch will get used. To prevent confusion, use a zip tie or electrical tape to tie up the yellow, white, and green wires that are on the side of the black wire.

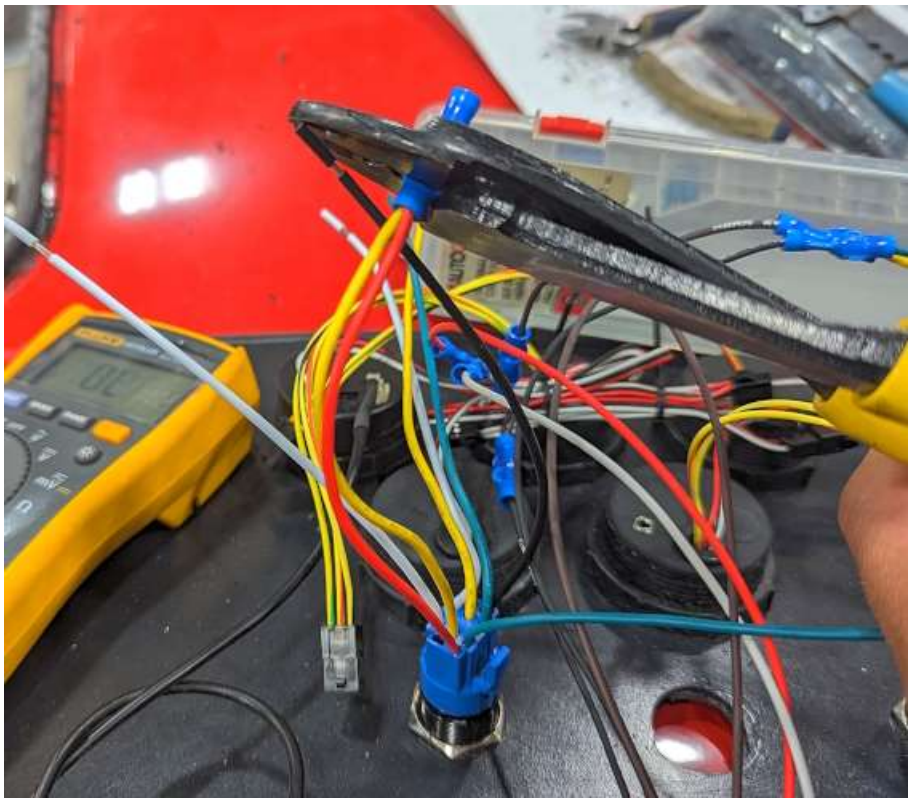

At the end of the connector with the red wire, connect the red and yellow wires together in one end of a butt connector.

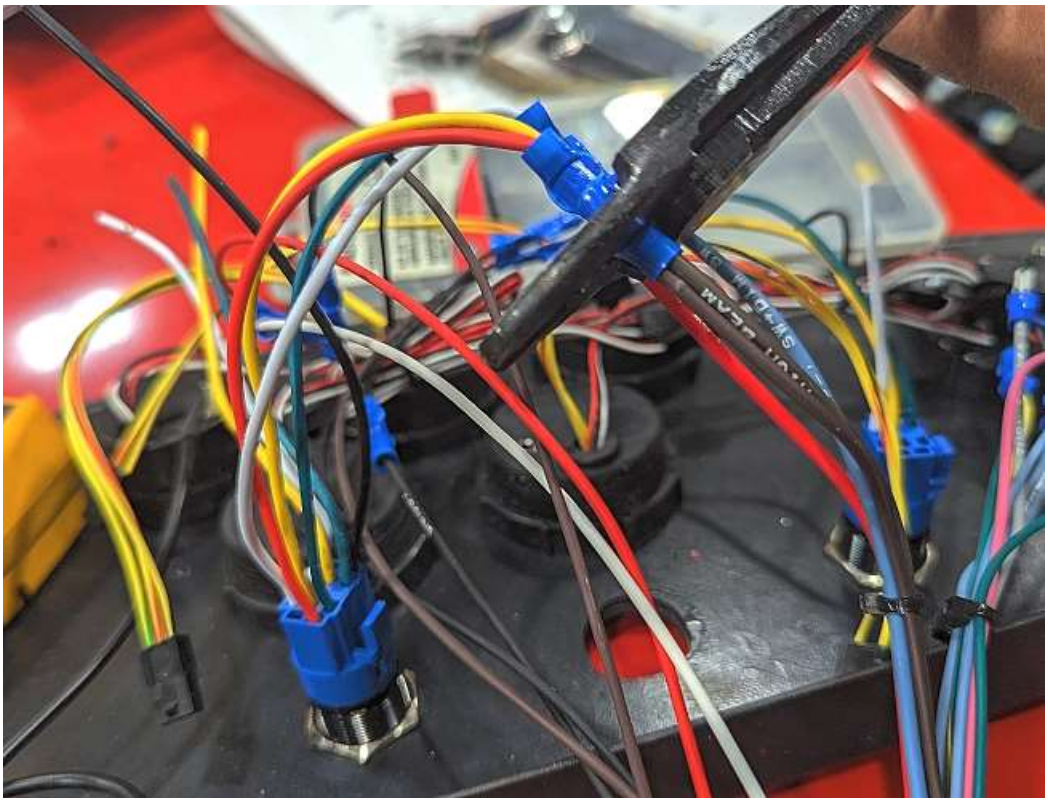

Connect the yellow and red wires to the brown high beam harness wires.

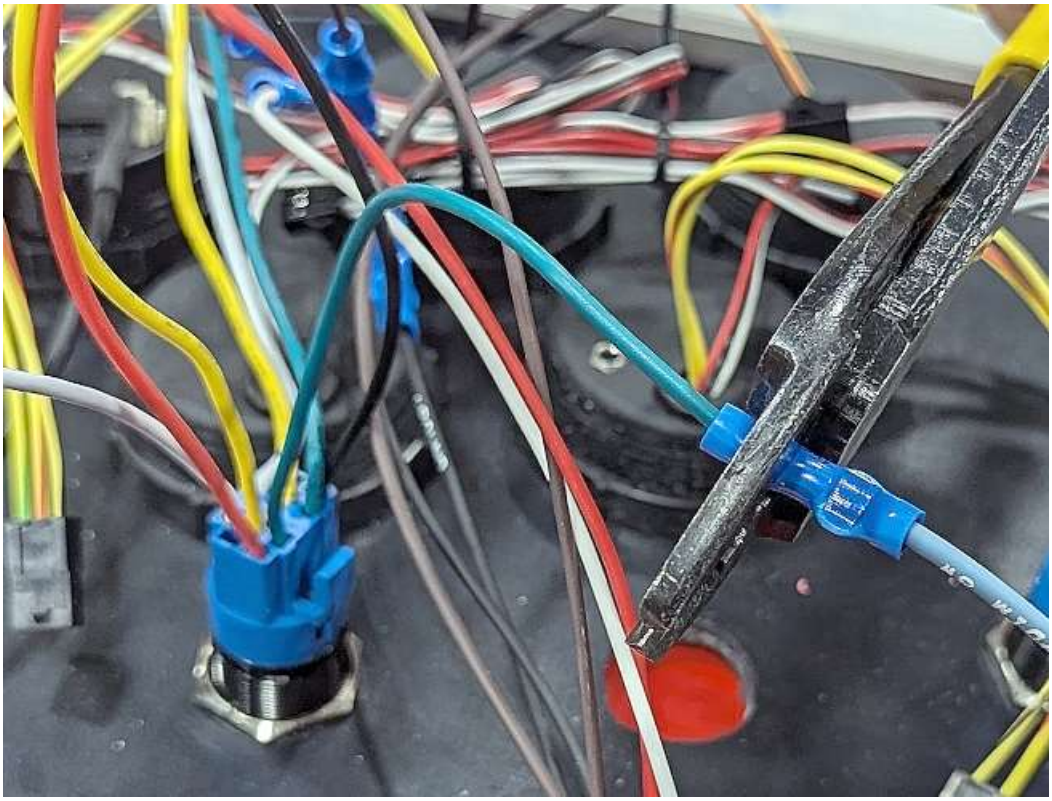

Connect the green wire next to the red wire to the blue HDLT SW->DIM SW harness wire.

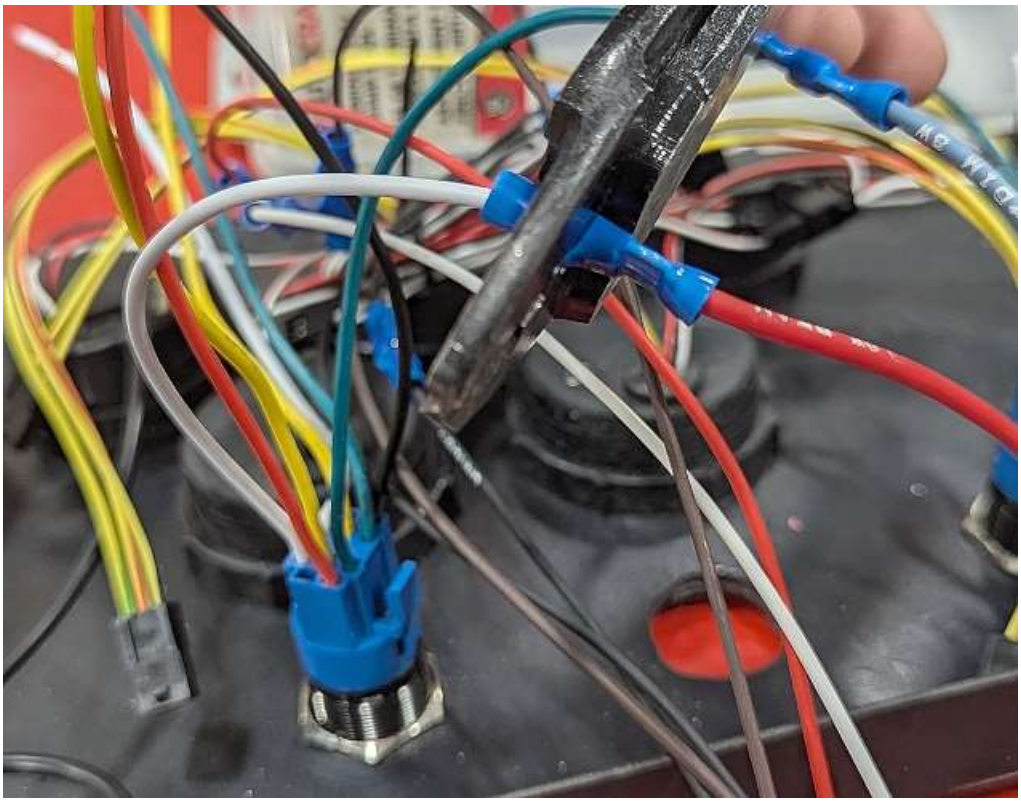

Connect the white wire to the red low beam harness wire.

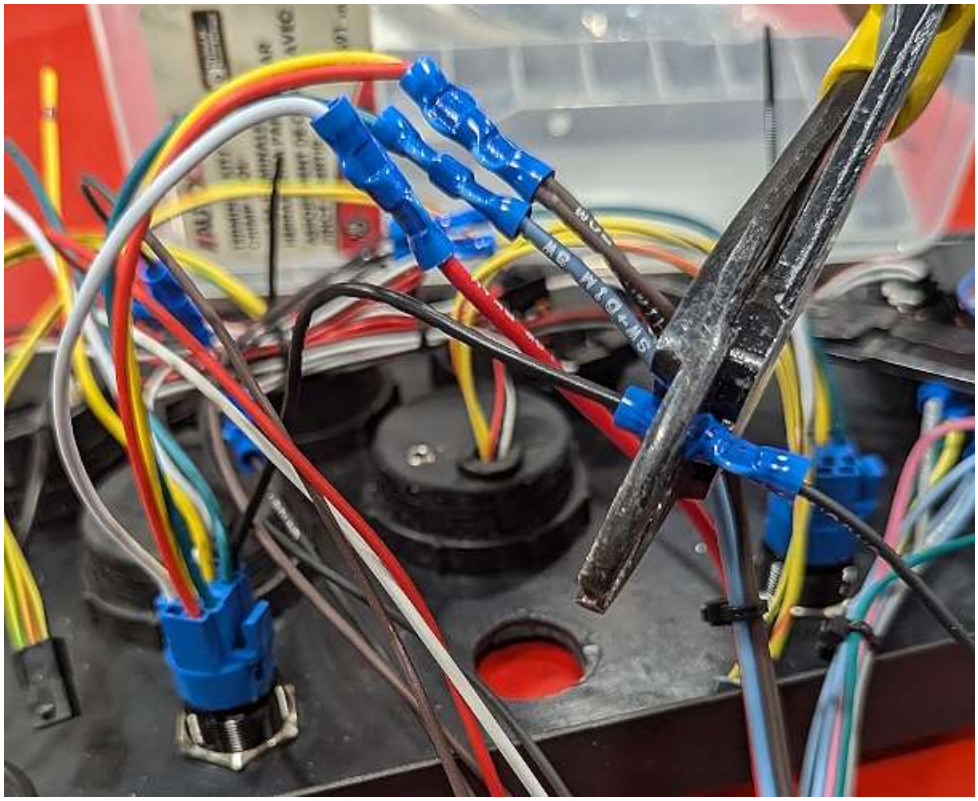

Connect the black wire to the black ground harness wire.

Turn signal lights

✋ The Factory Five Vintage gauges have built-in indicator lights so the large dash mounted ones included are not necessary.

Mount the turn signal switch and high low beam switch as well as indicators in the dash. These can be mounted wherever you like, use a ½" drill bit for the holes on both the switches and indicator lights.

Dash Install

Remove the upper steering shaft.
Raise the dash up so that it is between the body and the chassis dash hoop.
Insert the upper steering shaft back through the bearing and into the steering shaft.
Move the dash so that the steering shaft is centered left to right in the opening.
Drill for the dash mounting screws (3 evenly spread) through the dash and chassis with a $^{1}/_{8}$" drill bit then drill back through the dash only with a $^{3}/_{16}$" bit.
Screw the dash to the chassis using the black #8 screws with washers.
Push the ends of the dash behind the top of the door hinge and screw through the hinge into the dash end.

Steering wheel center section

🛠 WD40, $^{1}/_{8}$" hex key
🚘 Steering wheel/hardware, Factory Five Badge

Unwrap the steering wheel center section and push it into the steering wheel and boss, a little WD40 on the O-ring helps if it is tight.

Peel the backing off the badge and stick it in the center section making sure you are aligned with the top of the steering wheel. If necessary, file any flashing off the bottom edge of the emblem so that it will fit.

With the steering wheel in the position that is most comfortable for you tighten the set screws on the collar of the upper steering bearing.

Side Exhaust

🛠 $^{3}/_{16}$”, $^{5}/_{16}$” Hex key, ⅜”, ½”, $^{9}/_{16}$” socket, ratchet, $^{9}/_{16}$” wrench, drill, $^{5}/_{16}$” drill bit, hack saw.

🚘 4 into 4 Side Exhaust, $^{5}/_{16}$”x 1” button head screws, $^{5}/_{16}$”x 1.5” button head screws, $^{5}/_{16}$”x 2.5” button head screws, #14 x 1.5” tapping hex head screw, ⅜”x 1.25” socket head screws and mechanical locknuts.

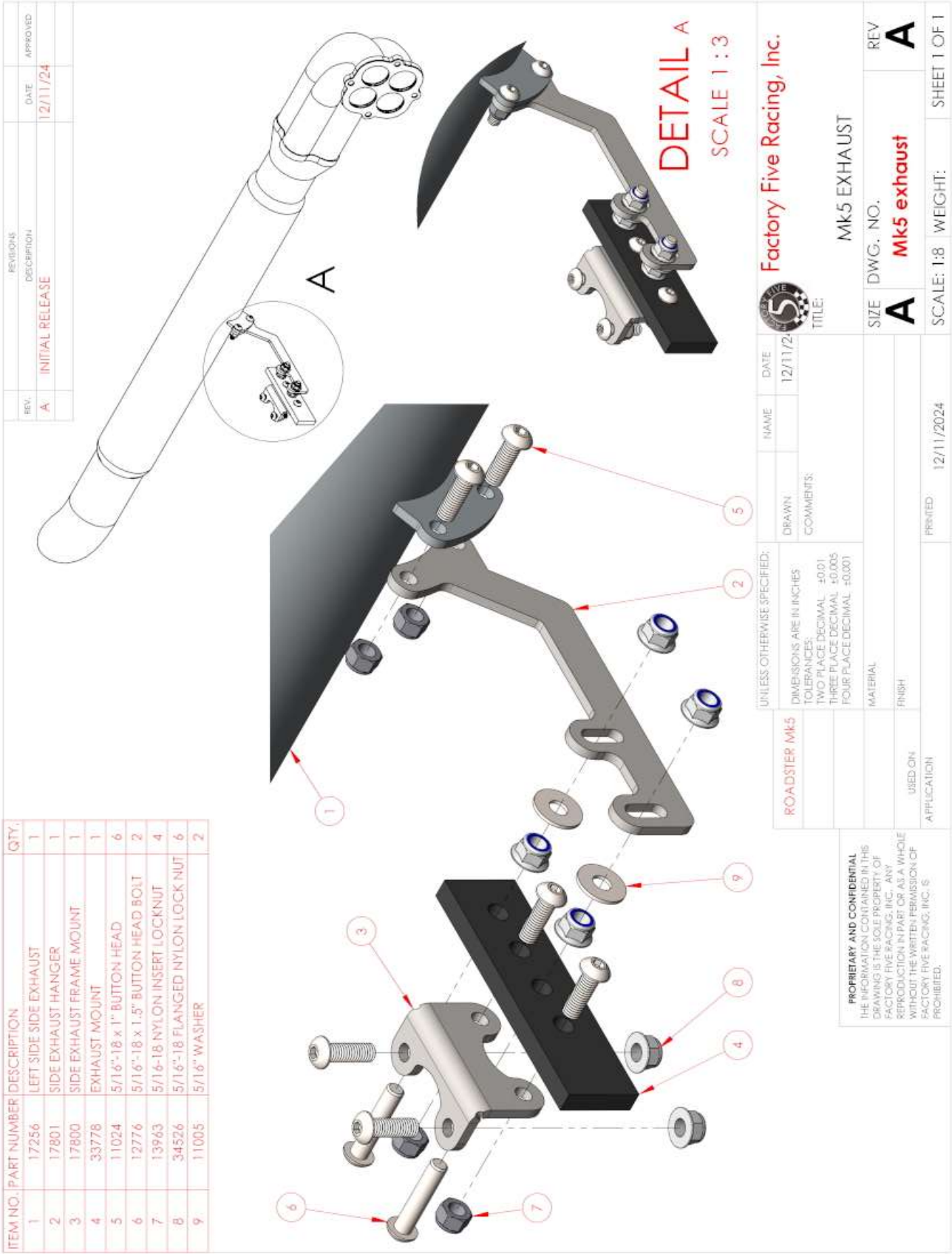

Unpack the hardware for mounting the side exhaust. The fasteners are in the fastener pack.

Cut the rubber hanger with a saw just above the metal bracket, the bracket is not used.
Attach the frame mount bracket to the side exhaust mount as shown in the diagram except for the vertical 1" button head screws. The side exhaust frame mount can get attached either way depending on the height needed to reach the bottom of the frame.

Bolt the side exhaust hanger to the pipe on the rear side of the bracket.

Bolt the pipe and gasket to the header or J-pipe flange with using the ⅜”x 1.25” socket head bolts and mechanical locknuts.

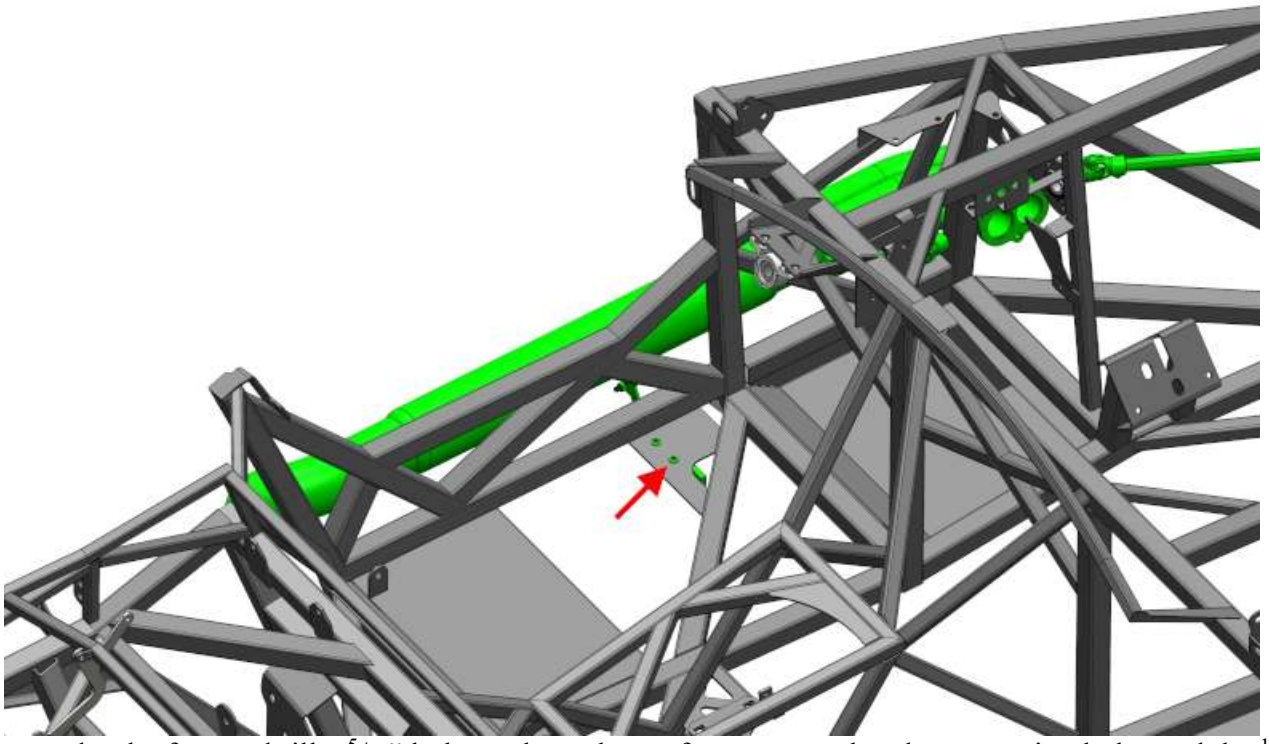

From under the frame, d rill a $^{5}/_{16}$” hole up through two frame mount bracket mounting holes and the $^{1}/_{8}$” steel frame plate and the aluminum floor.

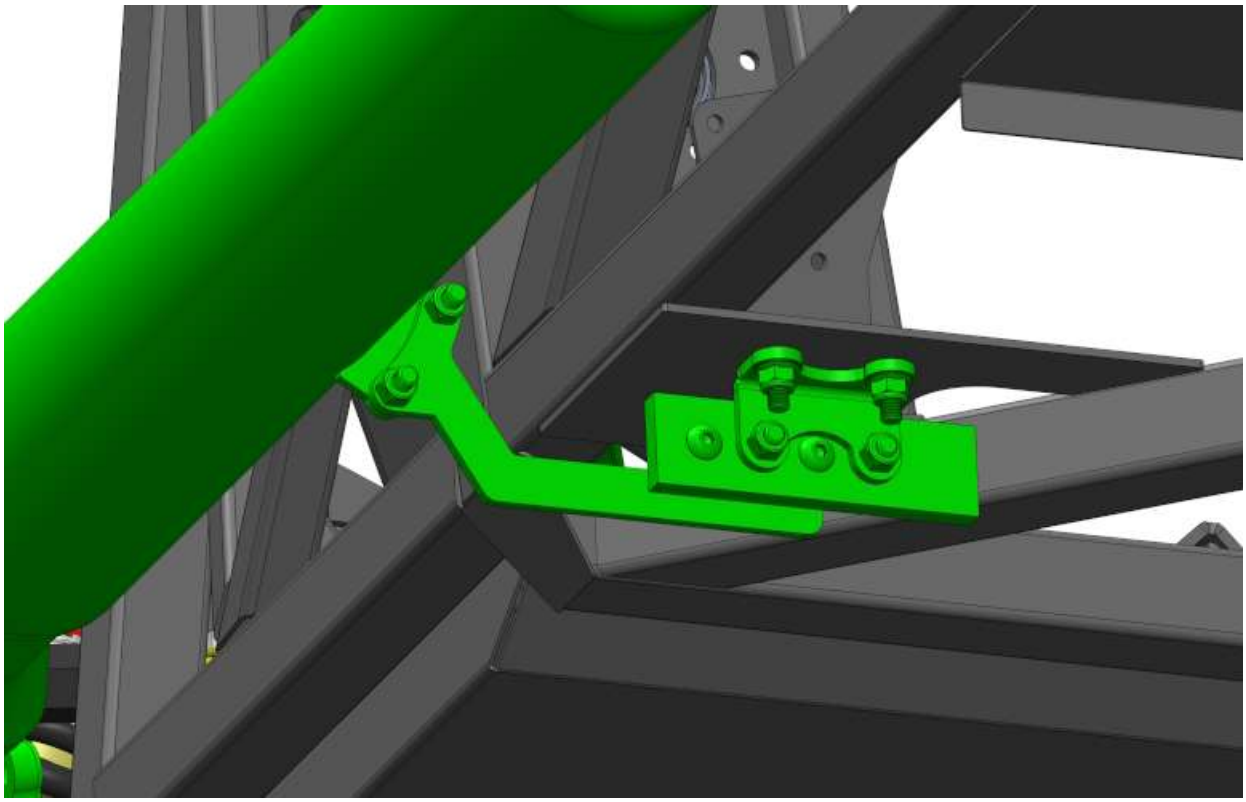

Run the 1” button head bolt for the side exhaust from the top (inside the cockpit) through the floor and the bracket. Attach using a ½” socket and $^{3}/_{16}$” hex key.

Tighten the whole assembly together.

Aluminum Splash guards

🛠 $^{1}/_{8}$”, $^{3}/_{16}$” drill bit, drill, rivet gun, silicone, caulking gun, ¾” socket, ratchet, extension, marker

🚘 Secondary body fasteners (Box 4), Packaged aluminum (Box 10), front wheel and tire

Front Wheel

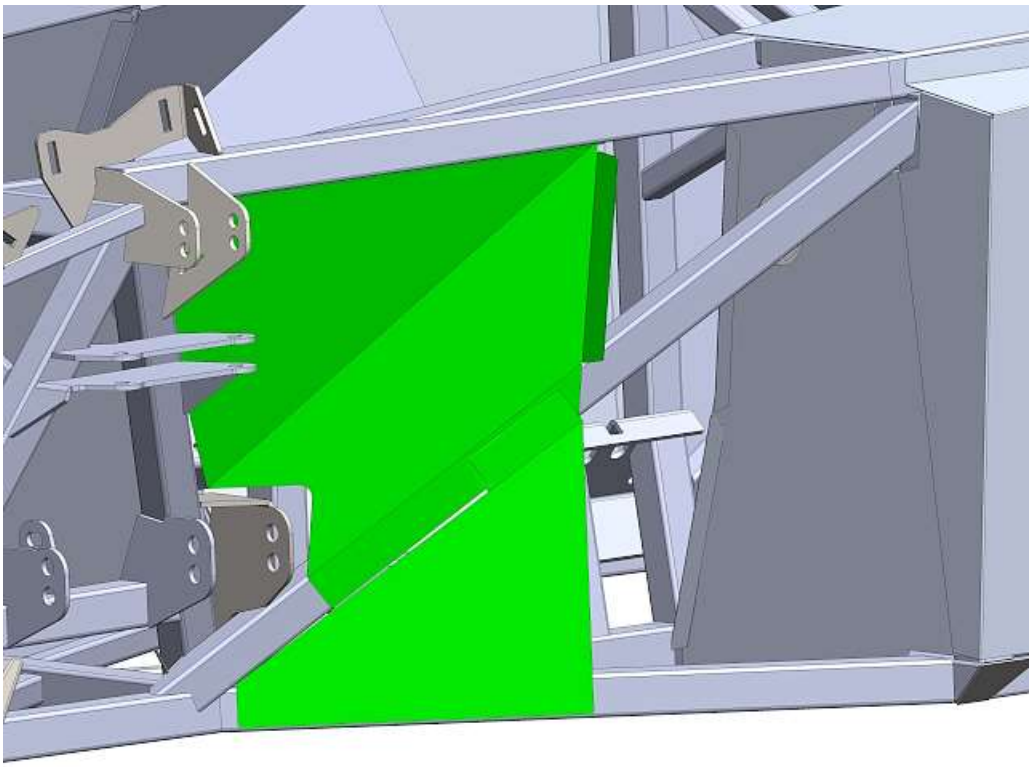

Silicone and rivet the front wheel lower and upper inside splash panels to the frame behind the front suspension.

Put some of the press-on bulb seal around the outside edge of the aluminum front splash guards (they look like large elephant ears) where they will contact the body.

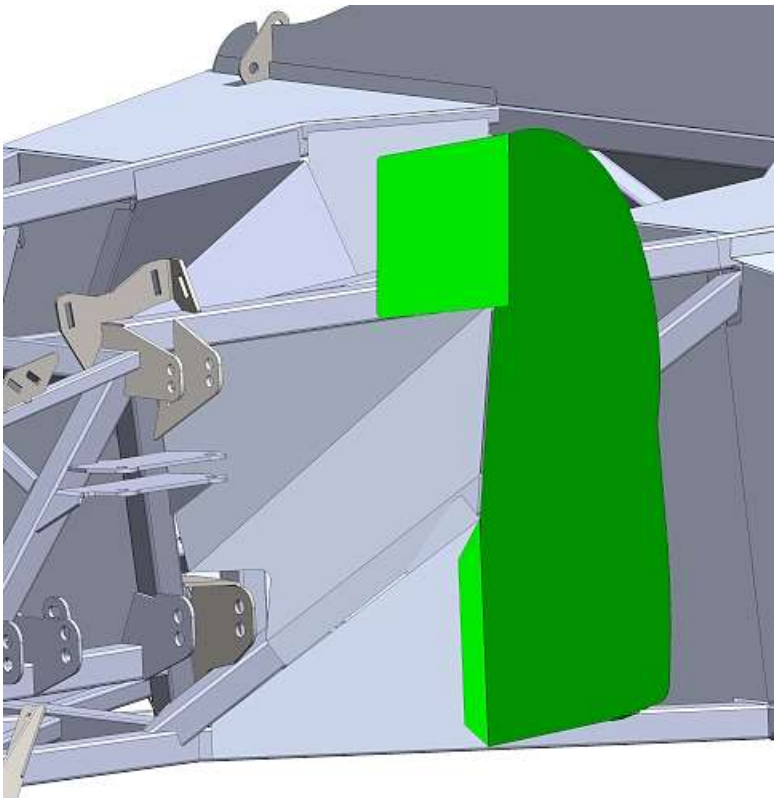

Hold the splashguards up against the rear bent lip of the engine bay aluminum. Overlap the two lips.

Fit the splash guards in position. If needed, trim them to fit around the outside edge, the weatherstrip will cover any trimming.

Put a wheel and tire on the car and check for aluminum clearance. If necessary, push the aluminum in and mark the inside of the body at the outer edge of the splashguards.
Remove the wheel.
Silicone and rivet the panels in place down the length of the flange.

Use one of the $^{3}/_{16}$" rivets to attach to the bottom of the fender just forward of the exhaust cut-out.

Rear Wheel

Push a piece of the bulb seal weather stripping around both rear splash guards where they will contact the body.

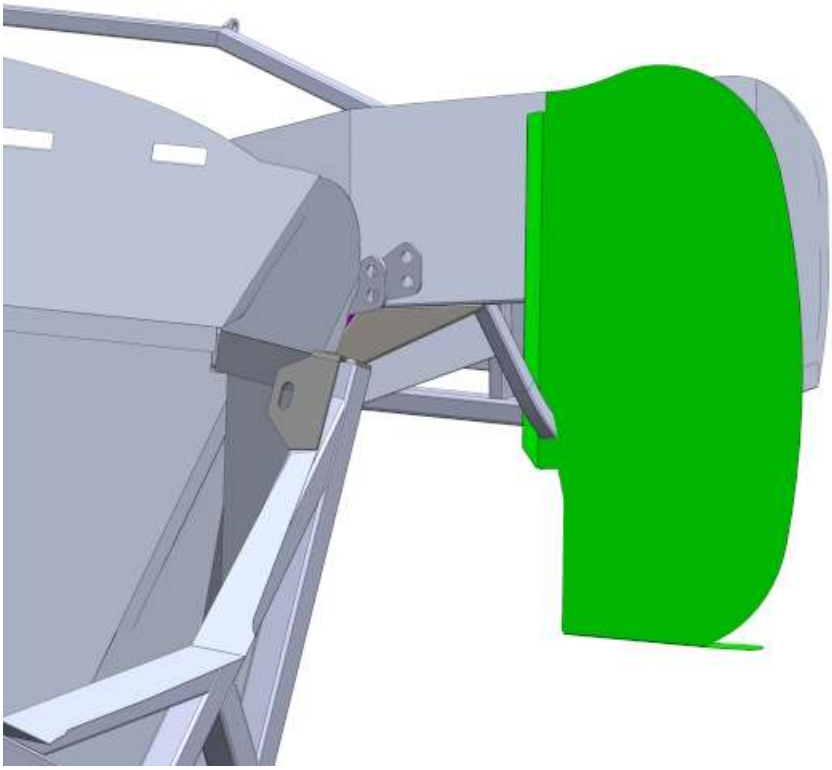

Fit the panels in place and trim the outside perimeter if needed. The small tab on the bottom faces towards the rear of the car and is on the bottom. The bent edge should be vertical. You may need to bend the flange of the gas tank down a little to get the panel in place.

Silicone and rivet the panels in place.

Bend the lower tab by hand to fit up flush with the body.

Use a long $^{1}/_{8}$” rivet as low as possible to attach the tab to the lower fender.

Finishing Touches

Review the Race car checklist in the appendix.

Headlight Alignment

🛠 Masking tape, marker, tape measure

✋ Make sure that the car is at the correct ride height before the alignment procedure is done. Ride height should be 4½” at the front and 4½” at the back measured to the bottom of the 4” round tube with the normal amount of people/weight in the car.

✋ It is important that the headlights are aimed properly for them to perform at their best. Lights that are aimed incorrectly will not only perform poorly but may also offend oncoming traffic. When replacing bulbs, it is a good idea to verify that your lights are properly aimed. Slight variances in filament position can translate to large variances in beam pattern. The following procedure does not require special aiming equipment and ensures proper aim.

Find a flat, level surface next to a vertical white wall where the car can be parked (a garage door is an ideal location at home).
Pull the car straight up to the wall as close as possible.
Using masking tape and a marker, draw a vertical line on the wall corresponding to the centerline of the vehicle.

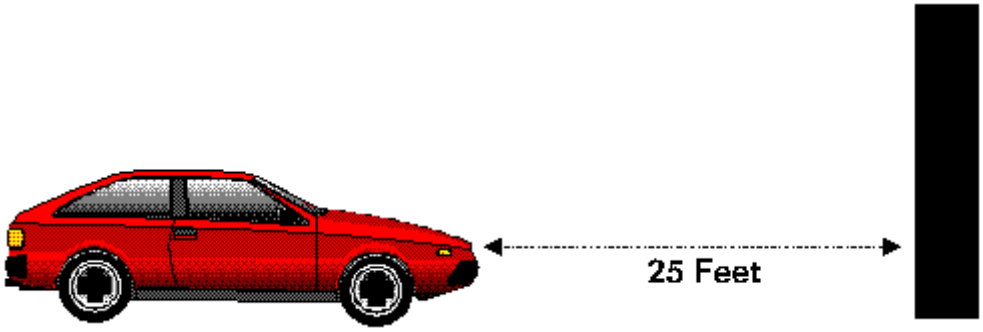

Pull the car straight back until the headlights are 25 feet from the wall.

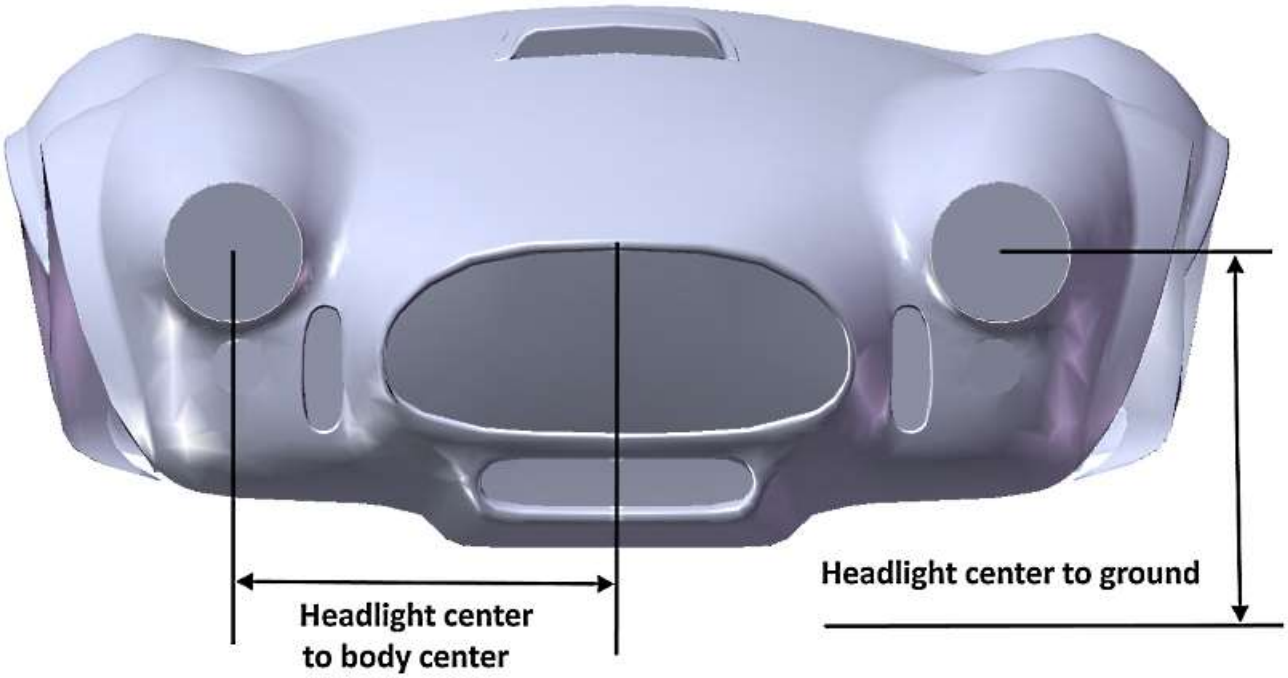

Make the following two measurements and write them down:

Measurement A: From the ground to the geometric center of one of the headlight lenses
Measurement B: From one of the low beam headlights to the vehicle centerline.

On a piece of masking tape, draw one horizontal line on the wall at a height exactly **2 inches lower** than Measurement A.

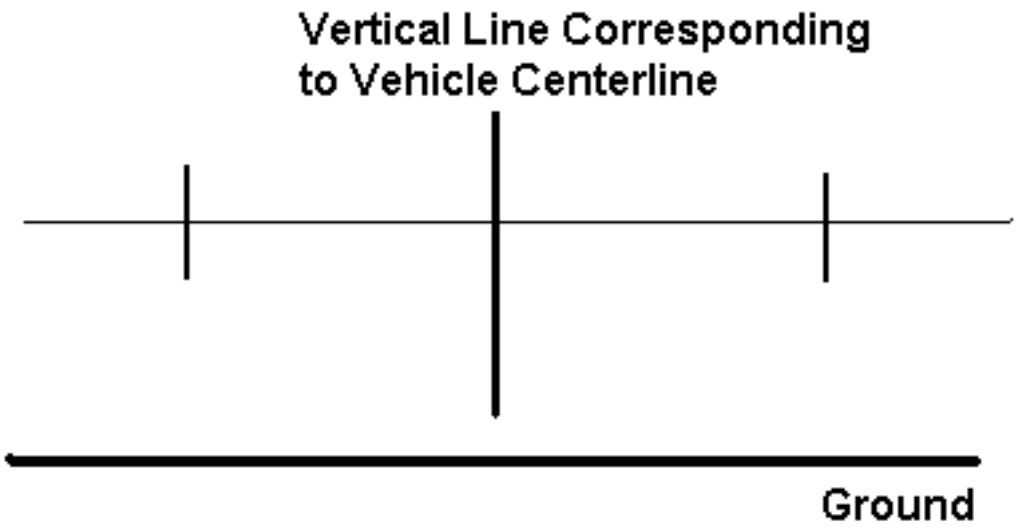

On the line, make vertical marks both to the right and left of the vehicle centerline mark at the distance of Measurement B from the vehicle centerline vertical line.

Turn the headlights on and adjust the vertical aim of the headlights so that the top horizontal cutoff of each of the beams is located along the horizontal line drawn on the wall.

Adjust the horizontal aim of the low beam headlights so that the point at which the top cutoff of the beam begins to slope upwards is located at the vertical marks.

Alignment Specifications

Take your new car to an alignment shop and have the car aligned properly before hitting the track. A minor flaw in alignment can cause very “twitchy” handling. Avoid temptation and never drive a car without proper alignment.

Front

For a car using a manual steering rack or the power rack without power use the following specifications:

Caster: 3°
Camber: -0.5°
Total Toe: $^{1}/_{16}$”

For a car using power steering car use the following specifications:

Caster: 7°
Camber: -0.5°
Total Toe: $^{1}/_{16}$”

2015 IRS only

Camber: -0.5°to -0.75°
Total Toe: 1/8” Toe in

Adjusting the upper control Arm

✋ Use the diagram below for reference.

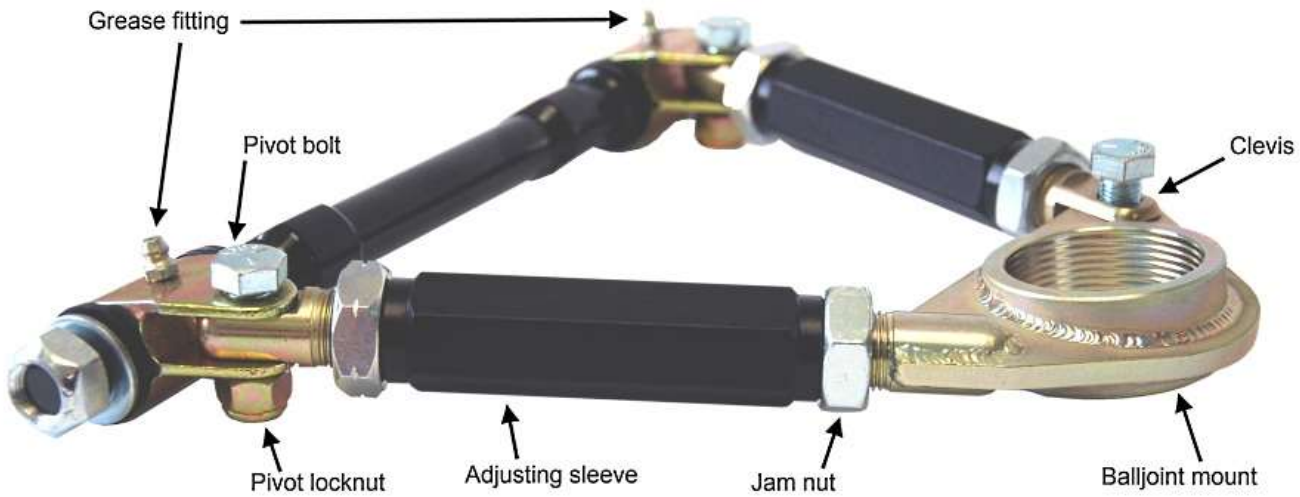

Slightly loosen the three pivot bolts using a ⅝” wrench and socket.
Loosen the jam nuts on both ends of each adjusting tubes using a 1⅛” wrench. Turn the adjusting tubes to lengthen or shorten the arm.
After you have adjusted the arm to the desired length, tighten down the jam nuts against the adjusting tubes, and then tighten each of the three pivot bolts. Torque the pivot bolts to 60 Lbft.
Grease both ends using chassis grease frequently to insure smooth, trouble-free operation.

✋ There should never be more than 1” of thread showing past the tightened down jam nuts on either end of both adjusting tubes.

The Pivot Bolts must be loosened while the car is being aligned and retightened afterwards

Once the car has been aligned, use a $1^5/_8$" wrench to loosen the upper control arm large jam nut and put some Loctite on the threads where the jam nut will sit.

Retighten the jam nut.

Brake Testing

- Brakes must be tested after installation or maintenance.
- Do not drive on untested brakes

Make sure pedal is firm: Hold firm pressure on pedal for several minutes, it should remain in position without sinking. If pedal sinks toward floor, check system for fluid leaks.

- DO NOT drive vehicle if pedal does not stay firm or can be pushed to the floor with normal pressure.

At very low speed (2-5 mph) apply brakes hard several times while turning steering from full left to full right, repeat several times.
Remove the wheels and check that components are not touching, rubbing, or leaking.
Carefully examine all brake components, brake lines, and fittings for leaks and interference.

Drive vehicle at low speed (15-20 mph) making moderate and hard stops. Brakes should feel normal and positive. Check again for leaks and interference.

- Always test vehicle in a safe place where there is no danger to (or from) other people or vehicles.
- Always wear seat belts and make use of all safety equipment.

Pad Bedding

- Once the brake system has been tested and determined safe to operate the vehicle, follow these steps for the bedding of all new pads and rotors.
- These procedures should only be performed on a race track, or other safe location where you can safely and legally obtain speeds up to 65 MPH, while also being able to rapidly decelerate.

Begin with a series of light decelerations to gradually build some heat in the brakes. Use an on-and-off the pedal technique by the brakes for 3-5 seconds, and then allow them to fully release for a period roughly twice as long as the deceleration cycle. If you use a 5 count during the deceleration interval, use a 10 count during the release to allow the heat to sink into the pads and rotors
After several cycles of light stops to begin warming the brakes, proceed with a series of medium to firm deceleration stops to continue raising the temperature level in the brakes.
Finish the bedding cycle with a series of 8-10 hard decelerations from 55-65 MPH down to 25 MPH while allowing a proportionate release and heat-sinking interval between each stop.
The pads should now be providing positive and consistent response.
If any amount of brake fade is observed during the bed-in cycle, immediately begin the cool down cycle.
Drive at a moderate cruising speed, with the least amount of brake contact possible, until most of the heat has dissipated from the brakes.
Avoid sitting stopped with the brake pedal depressed to hold the car in place during this time.
Park the vehicle and allow the brakes to cool to ambient air temperature.

Optional Parts

Check out www.factoryfiveparts.com for the latest options available.

Instructions are available in the parts catalog at www.factoryfiveparts.com/instructions/

Chapter

6

Performance Reference Material and Technical Support

Maintenance

Check the items on the race car check sheet in the Appendix on a yearly basis or before track days depending on how hard the car is driven.

Wheels

✋ Only 7”-9” wheels are recommended for the front. If using a wheel wider than 7”, FFR front lower control arms are needed to prevent the wheels rubbing the control arms.

Below is a chart indicating the **REAR** wheel sizes and backspacing that are possible using the Mark V kit:

Rear Wheel Backspace Equations			
Max Tire width	87-93	94-98	99-04
275mm*	(Width/2) +1	(Width/2) +2	(Width/2) +2.75
315mm	(Width/2) +1.625	(Width/2) +2.5625	(Width/2) + 3.25

*Can be used up to 10.50” wide wheel

	94-98	87-93	
OEM 17"x 8" FRONT/REAR	5.72	5.72	MAX TIRE WIDTH 245/45 R17
AFTERMARKET 17"x 9"	6.00	6.00	MAX TIRE WIDTH 275/40 R17
AFTERMARKET 17"x 10.5"	-	6.80	MAX TIRE WIDTH 315/35 R17

The max rim width for a 3-link is a 10.50”
If you have any questions, please call the Tech department at 508-291-3443.

If a modern look is what you are after, try the 17” Cobra-R or FR style wheels. If using the standard width 1987-93 rear, it is possible to use aftermarket 10.5” wide, 27mm offset wheels. If using a rear end that has been converted to 5-lug using the “Cobra” brake kit use two (4) 5.95” backspace wheels.

Left: FFR car using late model 17” Cobra-R rims. Right: Ford Racing Cobra R 17” wheels and 12” Cobra Brakes.

For a more vintage look, look at our Halibrand style wheels. Our online parts catalog: www.factoryfiveparts.com has more views of these wheels on cars.

Left: 17” FFR Halibrand style. Right 18” FFR Halibrand Style

1994-1998 REAR END

Use (4) 9” wide, 5.95” backspace wheels in the front and the rear. If you would like a wider tire than this in the rear, the axles and caliper brackets are changed so that the rear is the same width as the 87-93 rear ends. See the table above for different width wheel backspacing.

Performance Modifications

The following modifications and set-ups fall under the category of getting more horsepower from your engine and making your car perform better. You will find a hundred people a day that will tell you what you have got to have. Remember that a 2,400 lb. car stresses the parts less than a 3,100 lb. Mustang does, so all the components will last longer and can take more abuse than they did on the Mustang. Check out www.factoryfiveparts.com to see what we offer.

Gears

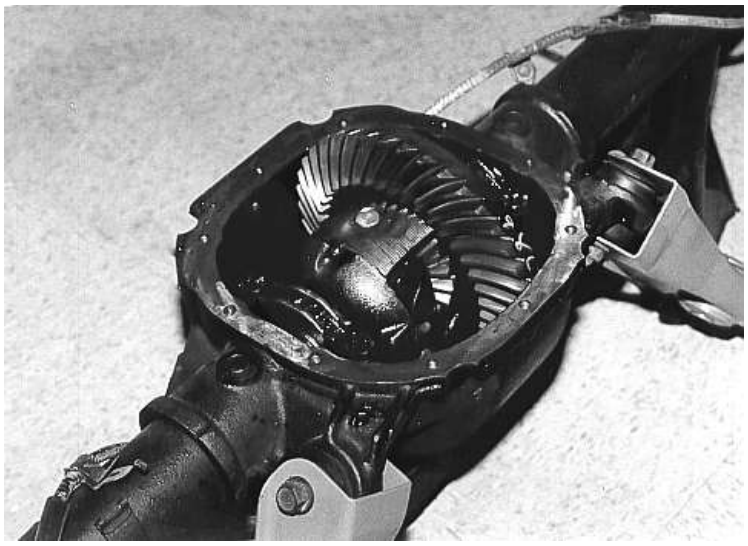

The Mustang 5.0 manual transmission car comes with either 2.73 or 3.08 rear end gear ratios from the factory. If you can get a rear from an automatic car, it will have 3.27 gears. There is an ID tag on the rear differential. If you find that your rear end is missing its ID tag, there is a good chance that the rear end was modified. To find out what ratio is on the differential, mark the pinion and axle at a start point. Turn the axle exactly one rotation and count the number of rotations that the pinion makes compared to the reference mark. For example: 3 ½ turns is a 3.55 rear ratio, etc.… The other way to check the ratio out is to open the rear differential up and look on the ring gear. While the rear is open change the fluid. This never gets done enough on the car.

Changing the gear ratio is one of the least expensive ways to improve your car's performance and it is easiest to do before assembly, since the rear is out of the car. If you know you are going to change the gears get the 2.73 rear since these are the most readily available, the least expensive and the least abused. All the gear ratios work well with our car but we have found that installing an aftermarket 3.55 ratio really wakes the motor up. If you change the rear end gears, do not forget to recalibrate your speedometer so that the speedometer reads correctly.

High Horsepower Transmissions

The stock T-5 is good for the 1992 stock 302 engine. If the engine is going to have some work done to it then an upgrade to a heavy duty, Ford Performance "Z" T-5 is all that is needed. An additional change to a Tremec TKX is needed if the engine that will be used has 300lbft of torque or more. One unique feature of the Tremec TKX is it allows the shifter to be relocated 8" forward of the normal shifter location if a vertical shifter is desired verses a forward angled shifter.

Steering Rack

The complete kit comes with an 18:1 manual steering rack. This is good for most driving situations. We have found that many prefer to use power steering. Factory Five has a power steering rack and pump for some applications available.

High Performance Braking Systems

Factory Five offers some great Wilwood Brake packages that are designed to fit inside the Factory Five wheels.

Factory Five also offers a remote vacuum booster for power brakes. See www.factoryfiveparts.com for more information.

The braking systems recommended below are designed for those searching for higher performance braking capabilities. These are systems that have been used successfully by our customers and us.

- Some of the setups may not clear some wheel sizes and designs.
- We recommend using Carbotech XP-8, Porterfield R-4, or Hawk Blue brake pads for the street. Though costly, you will find a significant difference in your cars ability to stop. If these pads are out of your price range, next in line would be Performance Friction Z-Compound pads.

Miscellaneous Brake Information

Carbotech Performance Brakes	877-899-5024	www.ctbrakes.com
Mustang Part's Specialties, Inc.	770-867-2644	www.stangparts.com
Porterfield Enterprises Ltd.	800-537-6842	www.porterfield-brakes.com
Hawk Brake, Inc.	800-542-0972	www.hawkbrake.com

Seats

For the road racers/autocrossers that want more side support, Factory five offers a variety of different options. Check out www.factoryfiveparts.com

Helpful Reference Material

Must Reads

- www.thefactoryfiveforum.com - The largest discussion forum for Factory Five Racing kits.

- Check out old and new build videos on our YouTube channel for additional help.

- See our Assembly manual page for the latest revision of the assembly manual.

Helpful

- 5.0L Ford Dyno Tests. By Richard Holdener. www.cartechbooks.com
- Ford Coyote Engines by Jim Smart. www.cartechbooks.com

- Engineer to Win. By Carroll Smith. www.amazon.com
- Prepare to Win. By Carroll Smith. www.amazon.com

Catalogs/Parts

- **Ford Performance Parts** - www.performanceparts.ford.com
- **Tire Rack** - Tire and wheel source. www.tirerack.com
- **Jeg's Performance** - High performance products. www.jegs.com
- **Summit Racing** - High performance products. www.summitracing.com
- **Paint over Rust 15** - Stops rust. 800-4576715. www.por15.com

Factory Five Aftermarket

- Check out the vendors section of https://thefactoryfiveforum.com/content.php?124-vendors

Tools

- **Craftsman Tools** - "Guaranteed forever" tools. Lowes or Ace Hardware www.craftsman.com
- **Tekton Tools** – Easy to replace quality "tool truck" tools https://www.tekton.com/
- **Husky Tools** – Home Depot "guaranteed forever" tools. www.homedepot.com
- **Eastwood** - Unique automotive tools. 800-345-1178. www.eastwoodco.com
- **Harbor Freight** - Discount tools. 800-423-2567. www.harborfreight.com

Insurance

- Northeast Classic Auto Insurance - Mike Smith. 800-866-6440. www.classiccarinsurance.com
- Country Companies - 800-950-5877. www.countryfinancial.com
- Hagerty Insurance **-** www.hagerty.com

A Final Note about Completed Cars and Car Builders

If you are reading this manual then you are at least contemplating the idea of building your own race car. Many component car companies offer services to those folks who find part or all of this too much to tackle. We do not.

If you are considering buying a completed vehicle from a third party (we do not and will not perform any vehicle assembly work for customers), keep the following in mind:

Factory Five Racing does not build or sell completed or partially completed vehicles. We are aware of some performance and hot rod shops that claim to specialize in building race cars and kit cars. We have over the years compiled a list of some of them.

Please know that there is no connection between FFR and those outside shops. There are no authorized FFR dealerships, and we do not warrantee their work. They are provided simply to help you identify businesses in your area that offer these types of services. You should research these carefully before choosing to purchase their products and/or services.

Appendix A – Templates

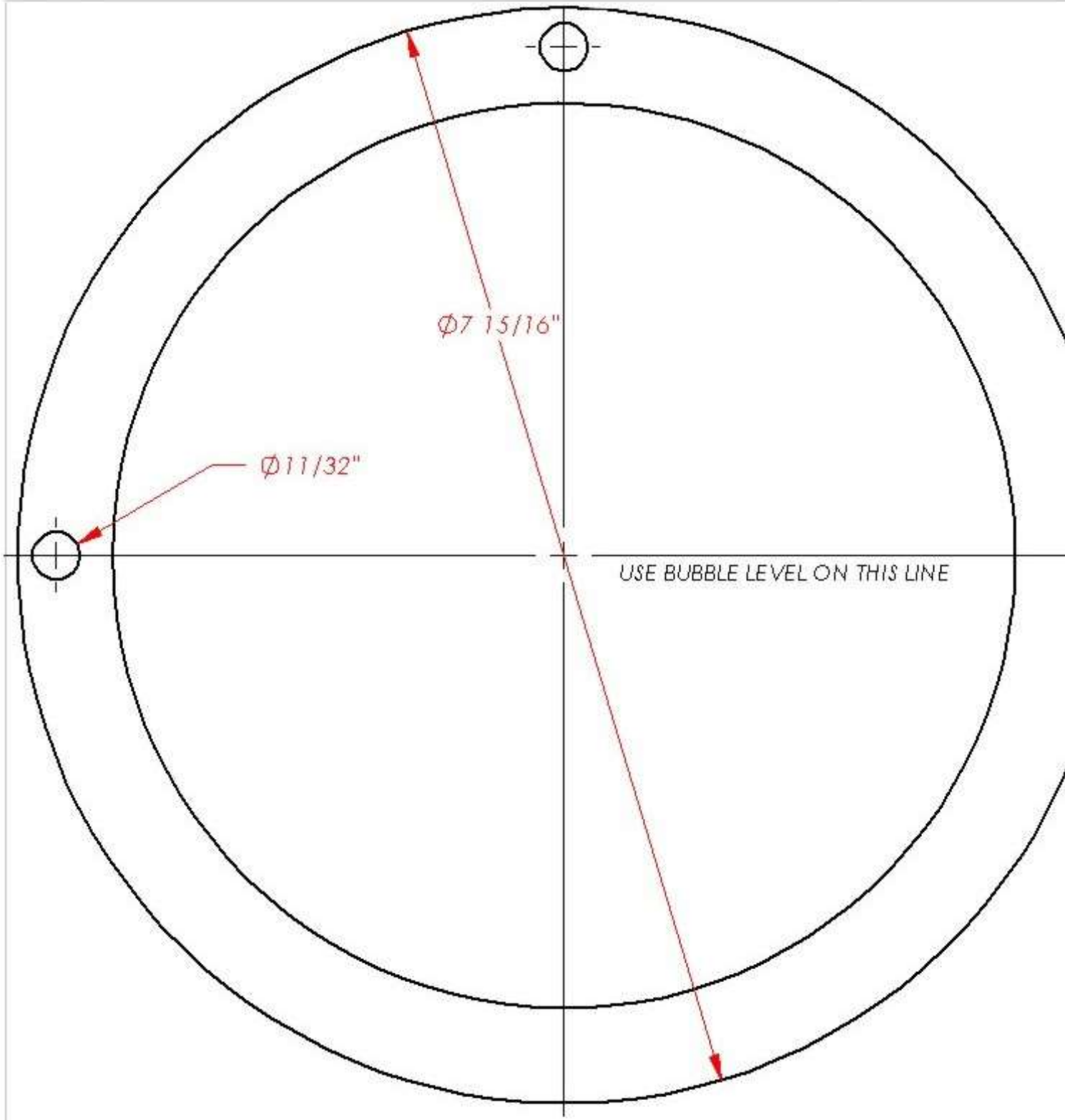

ROADSTER
SPEC CAR
COUPE

USED ON

APPLICATION

DIMENSIONS ARE IN INCHES
TOLERANCES:
TWO PLACE DECIMAL ±0.01
THREE PLACE DECIMAL ±0.005
FOUR PLACE DECIMAL ±0.001

MATERIAL

FINISH

PRINTED
6/30/2010

	NAME	DATE
DRAWN	JI	12/14/09
CHECKED		
ENG APPR.		
MFG APPR.		
Q.A.		

COMMENTS:

Factory Five Racing, Inc.

HEADLIGHT TEMPLATE

SIZE A | DWG. NO. 11001 | REV. C

SCALE: 1:1 | WEIGHT: | SHEET 1 OF 1

PROPRIETARY AND CONFIDENTIAL
THE INFORMATION CONTAINED IN THIS DRAWING IS THE SOLE PROPERTY OF FACTORY FIVE RACING, INC. ANY REPRODUCTION IN PART OR AS A WHOLE WITHOUT THE WRITTEN PERMISSION OF FACTORY FIVE RACING, INC. IS PROHIBITED.

REVISIONS			
REV.	DESCRIPTION	DATE	APPROVED
A	INITIAL RELEASE	12/7/11	

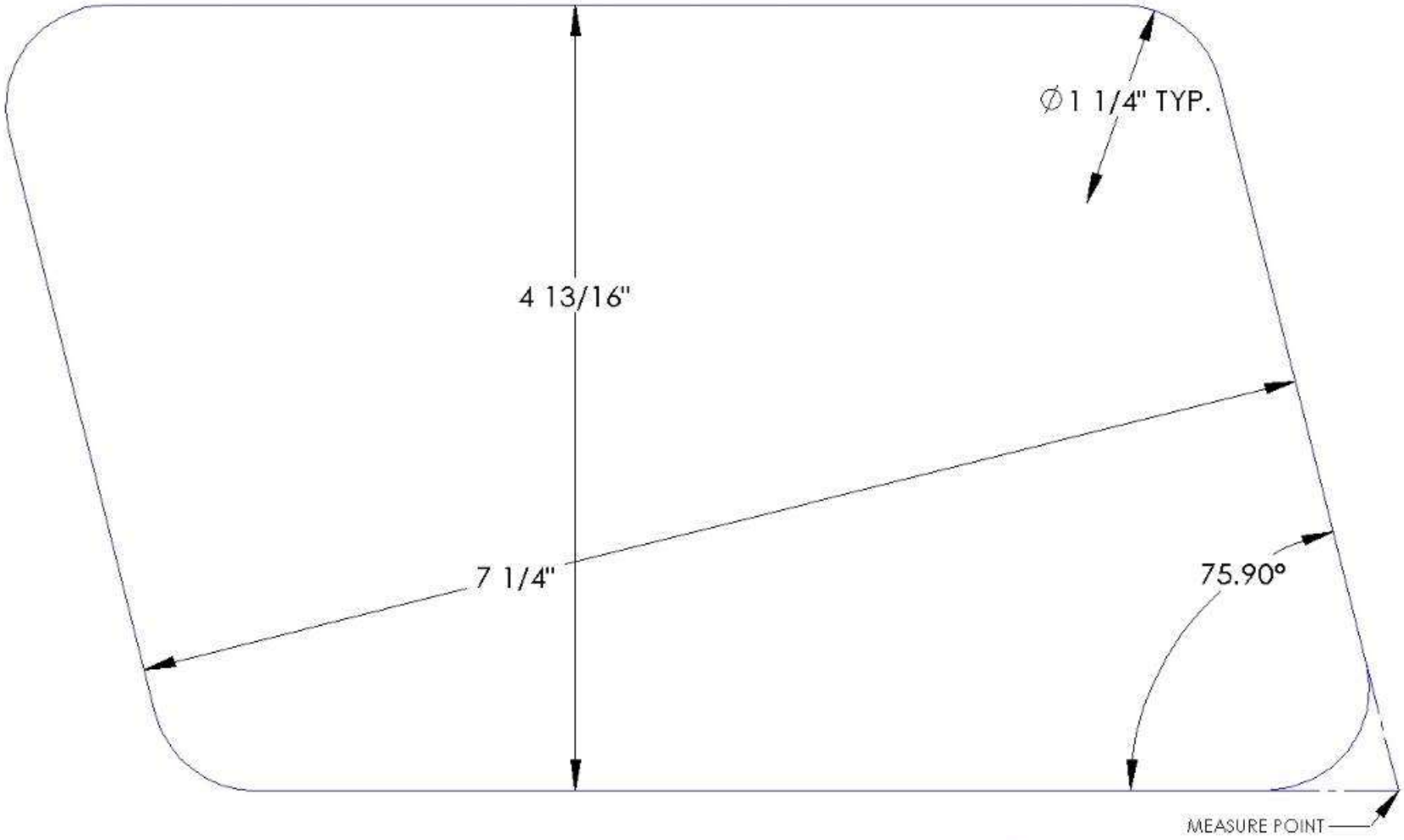

PROPRIETARY AND CONFIDENTIAL
THE INFORMATION CONTAINED IN THIS DRAWING IS THE SOLE PROPERTY OF FACTORY FIVE RACING, INC. ANY REPRODUCTION IN PART OR AS A WHOLE WITHOUT THE WRITTEN PERMISSION OF FACTORY FIVE RACING, INC. IS PROHIBITED.

ROADSTER

SPEC CAR

UNLESS OTHERWISE SPECIFIED:

DIMENSIONS ARE IN INCHES
TOLERANCES:
TWO PLACE DECIMAL ±0.01
THREE PLACE DECIMAL ±0.005
FOUR PLACE DECIMAL ±0.001

MATERIAL

	NAME	DATE
DRAWN	JI	12/7/11

COMMENTS:

Factory Five Racing, Inc.

TITLE: **SIDE LOUVER TEMPLATE**

SIZE	DWG. NO.	REV
A	15464	A

REVISIONS			
REV.	DESCRIPTION	DATE	APPROVED
C	ONE PIECE DESIGN	12/16/04	

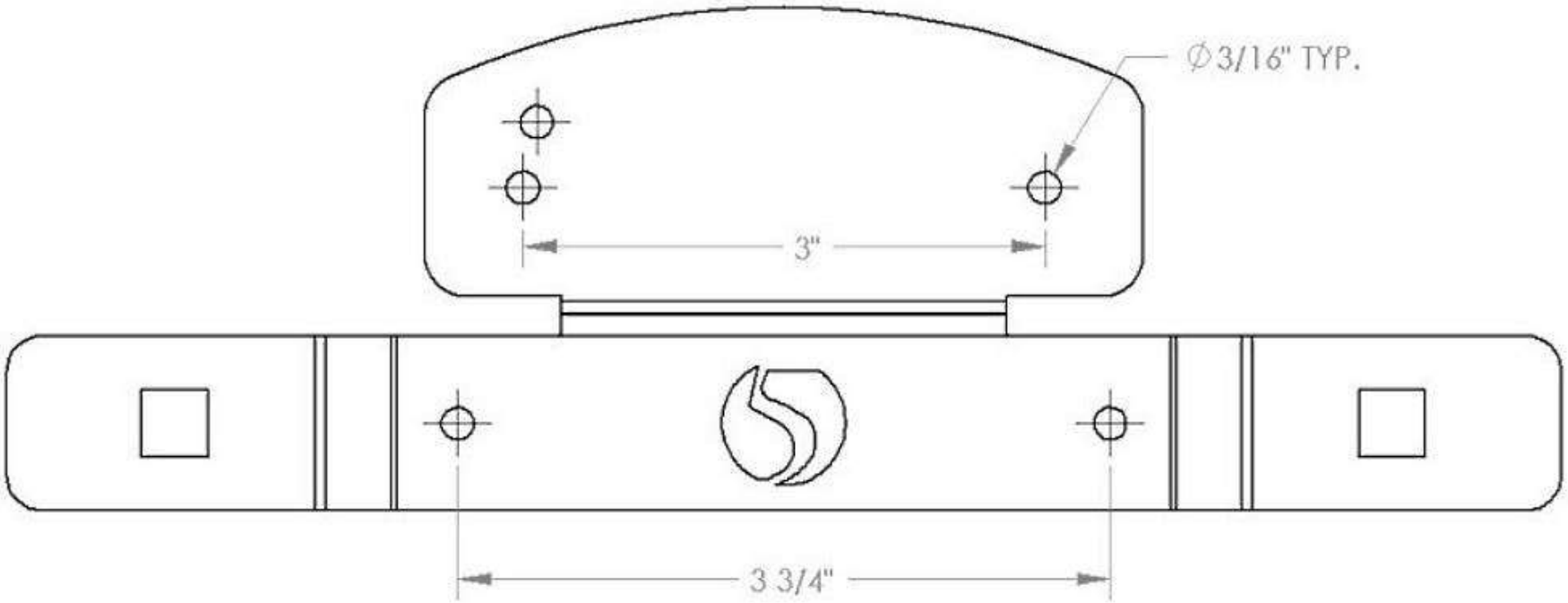

ROADSTER	UNLESS OTHERWISE SPECIFIED:		NAME	DATE
	DIMENSIONS ARE IN INCHES TOLERANCES: TWO PLACE DECIMAL ±0.01 THREE PLACE DECIMAL ±0.005 FOUR PLACE DECIMAL ±0.001	DRAWN	DR	12/16/04
		CHECKED		
		ENG APPR.		
		MFG APPR.		
	MATERIAL 16 GA STEEL	Q.A.		
USED ON	FINISH CHROME	COMMENTS: MOUNT HOLE TEMPLATE		
APPLICATION	PRINTED 3/29/2010			

PROPRIETARY AND CONFIDENTIAL
THE INFORMATION CONTAINED IN THE DRAWING IS THE SOLE PROPERTY OF FACTORY FIVE RACING, INC. ANY REPRODUCTION IN PART OR AS A WHOLE WITHOUT THE WRITTEN PERMISSION OF FACTORY FIVE RACING, INC. IS PROHIBITED.

Factory Five Racing, Inc.

TITLE:
LICENSE PLATE/LIGHT BRACKET

SIZE	DWG. NO.	REV
A	14097	C

SCALE: 1:1 | WEIGHT: | SHEET 1 OF 1

REVISIONS			
REV.	DESCRIPTION	DATE	APPROVED
A	INITIAL RELEASE	9/1995	

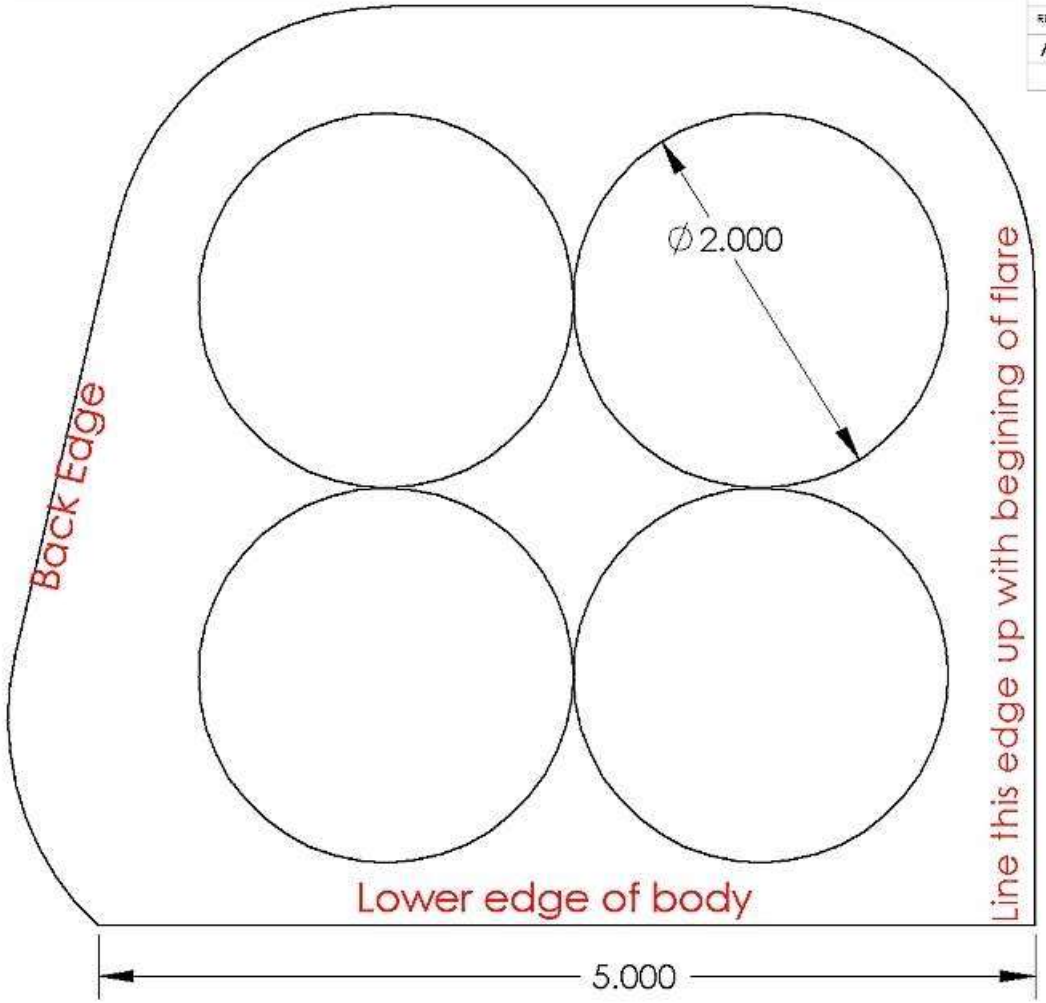

Note: This template is very tight, you can always cut more.

Cut outline and use on both sides

PROPRIETARY AND CONFIDENTIAL
THE INFORMATION CONTAINED IN THIS DRAWING IS THE SOLE PROPERTY OF FACTORY FIVE RACING, INC. ANY REPRODUCTION IN PART OR AS A WHOLE WITHOUT THE WRITTEN PERMISSION OF FACTORY FIVE RACING, INC. IS PROHIBITED.

ROADSTER
SPEC CAR

	NAME	DATE
DRAWN	D. SMITH	9/1995
CHECKED	FFR	
ENG APPR.		
MFG APPR.		
Q.A.		
COMMENTS:		

Factory Five Racing, Inc.

Side Exhaust Cut-out Template

SIZE	DWG. NO.	REV
A	11004	A

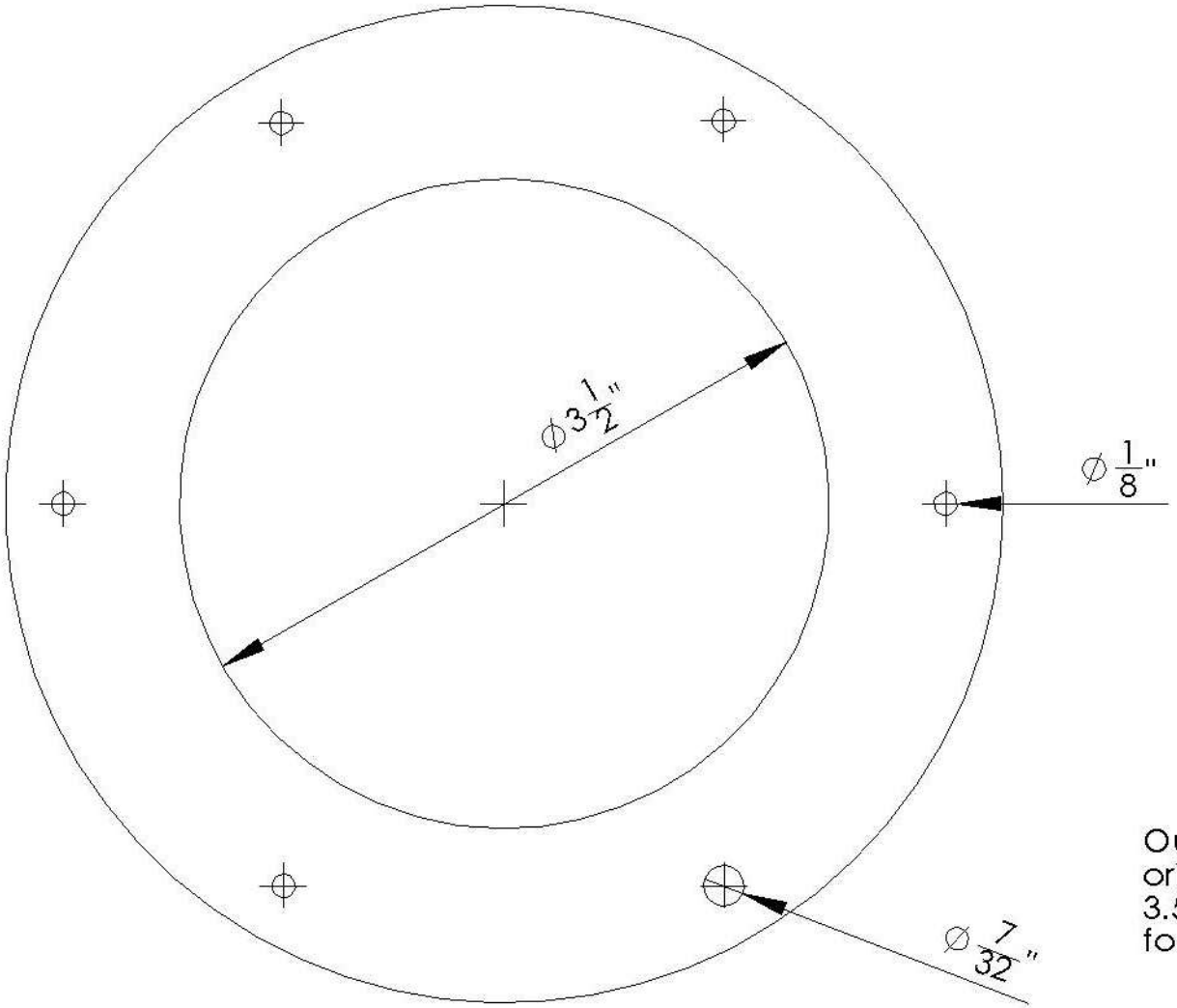

Outside circle is shown for placemer
orientation only, do not cut. Use a
3.5" holesaw in center and 1/8" drill b
for all except one small hole.

	UNLESS OTHERWISE SPECIFIED:		NAME	DATE
ROADSTER	DIMENSIONS ARE IN INCHES TOLERANCES: TWO PLACE DECIMAL ±0.01 THREE PLACE DECIMAL ±0.005 FOUR PLACE DECIMAL ±0.001	DRAWN	JI	9/26/97
COUPE		CHECKED		
		ENG APPR.		
		MFG APPR.		
	MATERIAL	Q.A.		
USED ON	FINISH	COMMENTS:		

PROPRIETARY AND CONFIDENTIAL
THE INFORMATION CONTAINED IN THIS DRAWING IS THE SOLE PROPERTY OF FACTORY FIVE RACING, INC. ANY REPRODUCTION IN PART OR AS A WHOLE WITHOUT THE WRITTEN PERMISSION OF FACTORY FIVE RACING, INC. IS PROHIBITED.

Factory Five Racing

TITLE:
FUEL NECK FLANGE TEMI

SIZE **A** DWG. NO. **11009**

REVISIONS			
REV.	DESCRIPTION	DATE	APPROVED
A	INITIAL RELEASE	1998	
B	REDRAWN	1/21/04	

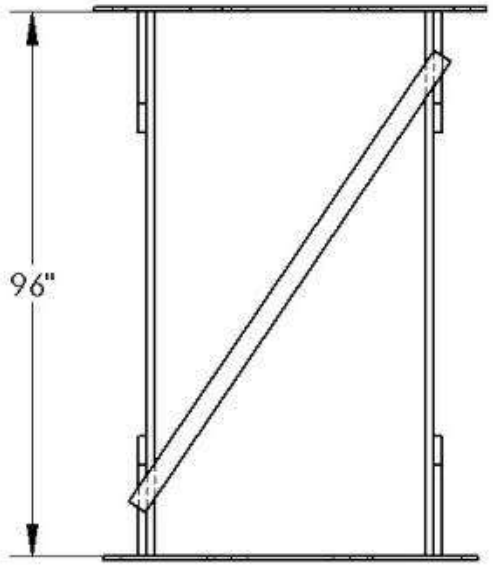

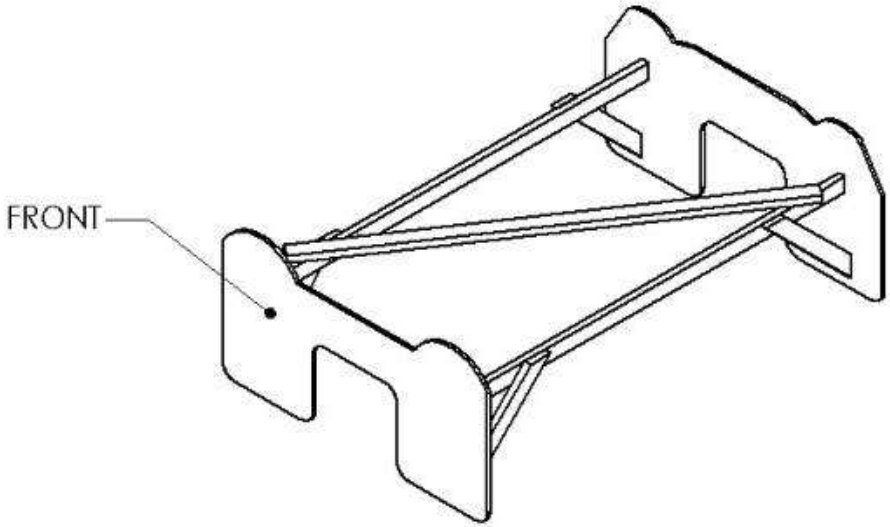

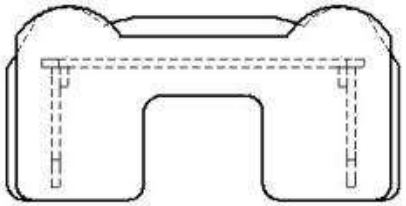

PROPRIETARY AND CONFIDENTIAL

THE INFORMATION CONTAINED IN THIS DRAWING IS THE SOLE PROPERTY OF FACTORY FIVE RACING, INC. ANY REPRODUCTION IN PART OR AS A WHOLE WITHOUT THE WRITTEN PERMISSION OF FACTORY FIVE RACING, INC. IS PROHIBITED.

			NAME	DATE
	UNLESS OTHERWISE SPECIFIED:			
ROADSTER	DIMENSIONS ARE IN INCHES TOLERANCES: TWO PLACE DECIMAL ±0.01 THREE PLACE DECIMAL ±0.005 FOUR PLACE DECIMAL ±0.001	DRAWN	DR	1/19/04
		CHECKED		
		ENG APPR.		
		MFG APPR.		
	MATERIAL	Q.A.		
USED ON	FINISH	COMMENTS:		
APPLICATION	PRINTED 3/29/2010			

Factory Five Racing, Inc.

TITLE:

BODY BUCK

SIZE	DWG. NO.	REV
A	11190	B

SCALE: 1:30 WEIGHT: SHEET 1 OF 2

REVISIONS			
REV.	DESCRIPTION	DATE	APPROVED
A	INITIAL RELEASE	1998	
B	REDRAWN	1/21/04	

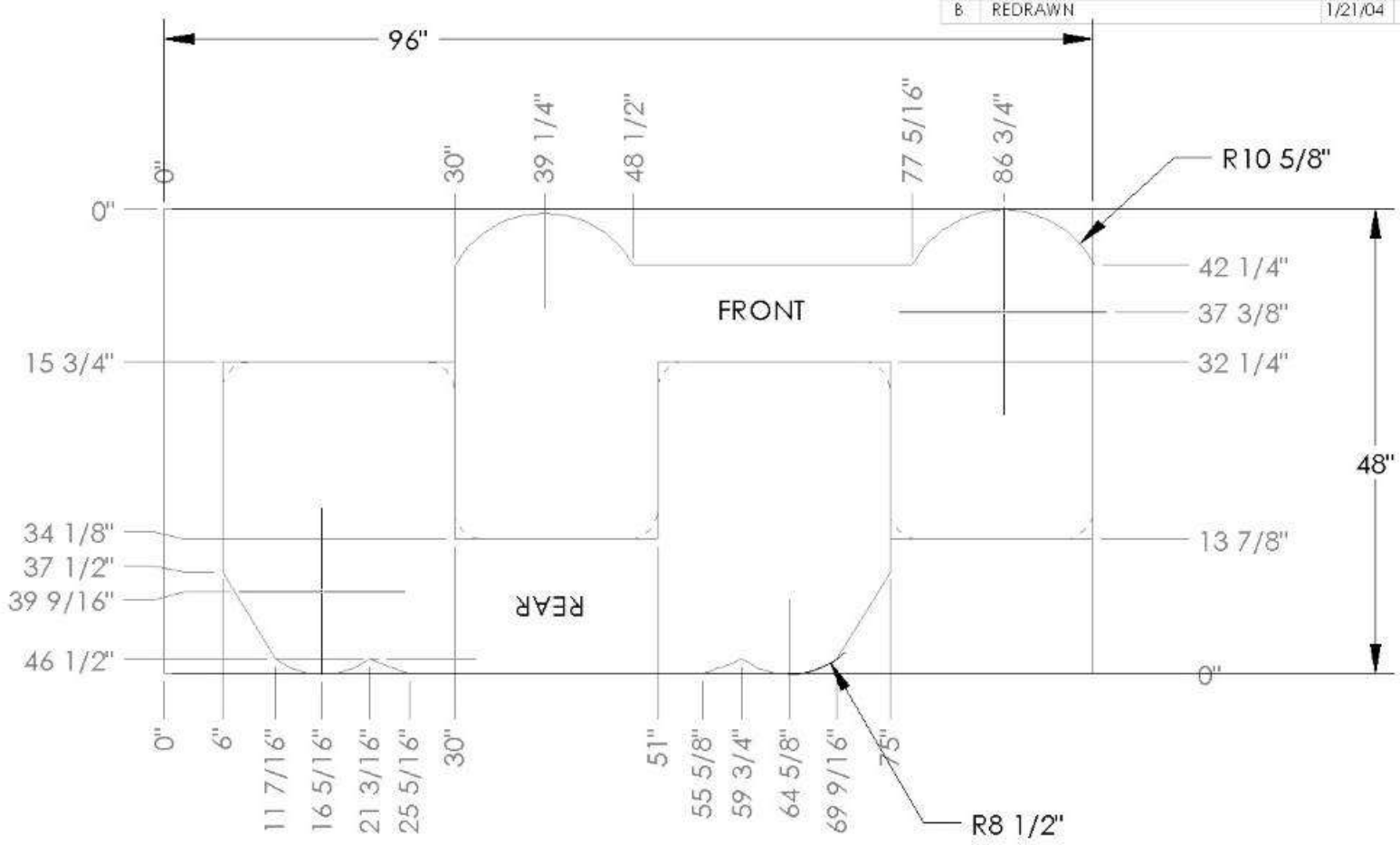

	UNLESS OTHERWISE SPECIFIED:		NAME	DATE
ROADSTER	DIMENSIONS ARE IN INCHES	DRAWN	DR	1/21/04
SPEC CAR	TOLERANCES: TWO PLACE DECIMAL ±0.01 THREE PLACE DECIMAL ±0.005 FOUR PLACE DECIMAL ±0.001	CHECKED		
		ENG APPR.		
		MFG APPR.		
	MATERIAL 3/4" PLYWOOD	Q.A.		
USED ON	FINISH	COMMENTS:		
APPLICATION	PRINTED 7/25/2017			

Factory Five Racing, Inc.

TITLE: BODY BUCK

SIZE	DWG. NO.	REV
A	11190	B

SCALE: 1:16 | WEIGHT: | SHEET 2 OF 3

PROPRIETARY AND CONFIDENTIAL
THE INFORMATION CONTAINED IN THIS DRAWING IS THE SOLE PROPERTY OF FACTORY FIVE RACING, INC. ANY REPRODUCTION IN PART OR AS A WHOLE WITHOUT THE WRITTEN PERMISSION OF FACTORY FIVE RACING, INC. IS PROHIBITED.

Appendix B – Driveshafts

MODEL	FFR#	SPLINE	DESCRIPTION	LENGTH
COUPE	60375	31	COYOTE w/2015 IRS, 6SPD MAGNUM, 2-3-6041X YOKE, 2-2-489 FLG	9.75
COUPE	60453	28	302/351 w/2015 IRS, T-5/AOD, 2-2-489 FLG	10.50
COUPE	60450	31	302/351 6 SPD MAGNUM, 2-3-6041X YOKE	10.50
COUPE	60175	31	302/351 w/2015 IRS, TKO, 4.6L/COYOTE TKO ROADSTER, 2-3-6041X YOKE, 2-2-489 FLG	10.50
COUPE	60455	31	COYOTE 6 SPD MAGNUM, 2-3-6041X YOKE	12.75
COUPE	60376	31	COYOTE w/2015 IRS, TKO, 2-3-6041X YOKE, 2-2-489 FLG	12.75
COUPE	60454	28	302/351 T-5/AOD	13.50
COUPE	16349	31	302/351 TKO, 2-3-6041X YOKE	13.50
COUPE	60452	31	COYOTE TKO, 2-3-6041X YOKE	15.75
HOT ROD	34048	27	CHEVY w/2015 IRS, 700R4/4L60/4L65E (1998+), 2-3-12051X YOKE, 2-2-489 FLG	31.00
HOT ROD	34049	31	302/351/4.6L/COYOTE/HEMI w/2015 IRS, TKO, 2-3-6041X YOKE, 2-2-489 FLG	31.25
HOT ROD	34050	28	302/351/4.6L/COYOTE w/2015 IRS, T-5/AOD, 2-2-489 FLG	31.25
HOT ROD	34046	31	CHEVY w/2015 IRS, TKO, 2-3-6041X YOKE, 2-2-489 FLG	32.1875
HOT ROD	34880	27	CHEVY 700R4/4L60/4L65E (1998+), 2-3-12051X YOKE	35.00
HOT ROD	34881	28	302/351/4.6L/COYOTE T-5/AOD	35.25
HOT ROD	34882	31	302/351/4.6L/COYOTE/HEMI TKO, 2-3-6041X YOKE	35.25
HOT ROD	34883	27	CHEVY 700R4/4L60 (93-97 EXCEPT VETTE), 2-3-12051X YOKE	35.75
HOT ROD	34884	31	CHEVY TKO, 2-3-6041X YOKE	36.1875
ROADSTER	15956	28	302/351 w/2015 IRS, T-5/AOD, 2-2-489 FLG	8.375
ROADSTER	16038	31	302/351 w/2015 IRS, TKO, COYOTE/LS T-56/GODZILLA IRS, 2-3-6041X YOKE, 2-2-489 FLG	8.375
ROADSTER	16348	28	302/351 T-5/AOD	11.25
ROADSTER	16350	31	302/351 TKO/ GODZILLA TKO, 2-3-6041X YOKE	11.25
ROADSTER	16349	31	4.6L/COYOTE/LS TKO/T-45/3650, BIG BLOCK TKO, 302/351 TKO COUPE, 2-3-6041X YOKE	13.50
35 TRUCK	35201	28	302/351/4.6L/COYOTE USING T-5/AOD, USE 2-2-489 FLG	42.50
35 TRUCK	35202	31	302/351/4.6L/COYOTE/HEMI USING TKO, USE 2-3-6041X YOKE AND 2-2-489 FLG	42.50
35 TRUCK	35203	27	CHEVY USING 700R4/4L60/4L65E (1998+), USE 2-3-12051X YOKE AND 2-2-489 FLG	42.50
35 TRUCK	35204	27	CHEVY USING 700R4/4L60 (93-97 EXCEPT VETTE), USE 2-3-12051X YOKE AND 2-2-489 FLG	43.00
35 TRUCK	35205	31	CHEVY USING TREMEC TRANS. 2-3-6041X YOKE AND 2-2-489 FLG	43.4375
35 TRUCK	35262	28	302/351/4.6L/COYOTE USING T-5/AOD, 2-2-949 FLG	43.8125
35 TRUCK	35263	31	302/351/4.6L/COYOTE/HEMI USING TKO, 2-2-949 FLG	43.8125
35 TRUCK	35264	27	CHEVY USING 4L60/4L65E (1998+), USE 2-3-12051X YOKE, 2-2-949 FLG	43.8125
35 TRUCK	35265	27	CHEVY USING 700R4/4L60 (93-97 EXCEPT VETTE), 2-2-949 FLG	44.3125
35 TRUCK	35266	31	CHEVY USING TREMEC TRANS, 2-2-949 FLG	44.75

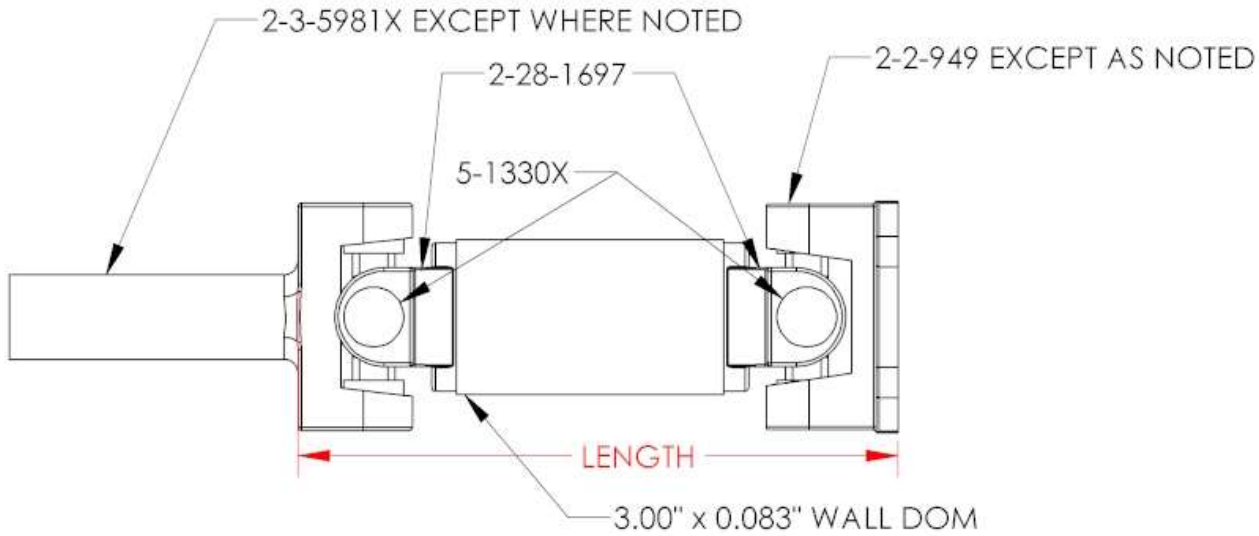

NOTE: 1. FOR ALL OTHER TRANSMISSIONS, INSTALL TRANS. AND MEASURE.
2. 94-95 BELLHOUSING AND T-5 TRANS ARE LONGER SO SHORTEN DRIVESHAFT BY 0.75".

ROADSTER
COUPE
HOT ROD
35 TRUCK
USED ON
APPLICATION

DIMENSIONS ARE IN INCHES
TOLERANCES:
TWO PLACE DECIMAL ±0.01
THREE PLACE DECIMAL ±0.005
FOUR PLACE DECIMAL ±0.001
MATERIAL
FINISH
PRINTED 12/13/2024

Factory Five Racing, Inc.

DRIVESHAFT DIAGRAM

	NAME	DATE
DRAWN	JI	12/18/03

COMMENTS: 2015 IRS USE SPICER 2-2-489 PINION FLANGE

SIZE A DWG. NO. 13023 REV. Z
SCALE:1:3 WEIGHT: SHEET 1 OF 1

PROPRIETARY AND CONFIDENTIAL
THE INFORMATION CONTAINED IN THIS DRAWING IS THE SOLE PROPERTY OF FACTORY FIVE RACING, INC. ANY REPRODUCTION IN PART OR AS A WHOLE WITHOUT THE WRITTEN PERMISSION OF FACTORY FIVE RACING, INC. IS PROHIBITED.

Appendix C – Race car check sheet

CAR_____ Date_____

Steering

- Steering wheel tight ___
- Universal joint set screws tight ___
- Rack mount bolts tight ___
- Tie rod ends tight ___
- Tie rod to spindle bolts tight ___
- Steering free lock to lock ___

Front Suspension

- Ride height ___
- Front wheel bearings tight ___
- Upper and lower ball joints tight with cotter pins ___
- Upper control arm bolts tight ___
- Upper control arm jam nuts and clevis nuts tight ___
- Lower control arm bolts tight ___
- Shock mounting bolts tight ___
- Spring collars taped/tight ___
- Tire pressure set (recommend 22-25 psi) ___
- Lug nuts tight (90 lb-ft) ___

Brakes

- Front Caliper bolts tight ___
- Rear caliper bolts tight ___
- Rotors clean no cracks or groves ___
- Brakes bled/bleeders tight ___
- No leaks under pressure ___
- Master cylinder bolts tight ___
- Reservoir full ___
- Flexible lines tied up and undamaged ___

Cockpit

- Seat securely bolted ___
- Harnesses securely bolted ___
- Harnesses free from cuts or abrasions ___
- Pedals travel freely and bolts secure ___
- Throttle return springs hooked up ___
- Brake push rod secure and clip tight ___
- Interior wiring tight ___
- Shifter tight and free ___
- Mirrors tight and adjusted ___
- Windshield side bar screws tight ___
- Inspection/registration up to date ___

Electrical

- Battery charged ___
- Battery mount and connections secure ___
- Brake lights functioning ___
- All wires free and clear of moving or hot parts ___

Rear Suspension

- Ride height ___
- Shock mounting bolts tight ___
- Spring collars tight/taped ___
- Wheel bearings tight (IRS) ___
- Tire pressure set (recommend 22-25 psi) ___
- Lug nuts tight (90 lb-ft) ___

Transmission

- Clutch height/free play adjusted ___
- No leaks ___
- Driveshaft universal joints no bind or wear ___
- Output shaft snug no bind ___
- Drive shaft bolts tight ___
- Transmission mount bolts tight ___
- Bellhousing bolts tight ___
- Starter tight ___

Engine

- Oil level checked/changed/cap tight ___
- Water level checked including reservoir ___
- Plug wires tight including coil ___
- Belts tight ___
- Engine mount nuts tight ___
- Fuel lines no leaks under pressure ___
- No coolant or oil leaks ___
- Exhaust tight ___
- Fuel level checked ___

This list is not complete but a suggested list of items to check before driving. It is also a good idea to check these items on a yearly basis or sooner depending on how hard the car is driven

Appendix D – Fluid Specifications

Engine

	Oil Type	Capacity
302	10W-30	5.0 qts
4.6L/Coyote	5W-20	8.0 qts w/FFR pan

Transmission

Oil Type	T-5	TKO/TKX	T-56
Mercon/Dexron III Trans. Fluid	2.8 qts.	2.64 qts.	4.0 qts

8.8 Solid Rear Axle

Oil Type	Capacity	Friction Modifier
80W-90 Gear oil	1.875 qts.	4 oz.

IRS

Fluid	Amount
Motorcraft SAE 75W-85 Synthetic Hypoid Gear Lubricant	3.15-3.30 pt. (1.49-1.56 L)
Friction Modifier	3.0-3.5 oz (0.089-0.104 L)

Appendix E – Torque Specifications

General Bolt torque specifications*

Thread	SAE English
	Zinc Plated
	Ft-Lb.
¼ -20	8
¼ -28	10
5/16 -18	17
5/16 -24	19
⅜ -16	30
⅜ -24	34
7/16 -14	48
7/16 -24	54
½ -13	75
½ -20	83
9/16 -12	100
9/16 -18	100
⅝ -11	100
⅝ -14	100

Thread	SAE Metric
	Zinc Plated
	Ft-Lb.
M8	18
M10	33
M12	61
M14	98
M16	120

ATTENTION: Use the following specs to torque Stainless Bolts.

3/16” 11 ft-lb (132 in-lb.)
⅜” 16 ft-lb (192 in-lb.)

*Use above specs unless otherwise noted in the assembly process.

Appendix F – Metric Fastener Lengths

ITEM NO.	PART NUMBER	DESCRIPTION	QTY.
1	12338	M6-1.0 x 30MM SCREW	1
2	16040	M10 x 20MM SOCKET HEAD	1
3	15961	M10 x 25MM SOCKET HEAD	1
4	13706	M12 x 110MM BOLT	1
5	15936	M14-2.0 x 80MM FLNG HEAD	1
6	15962	M14-2.0 x 100MM FLANGE HEAD BOLT	1
7	14925	M16-2.0 x 110MM FLANGE HEAD BOLT	1
8	15963	M16-2.0 x 130MM FLNG HEAD	1

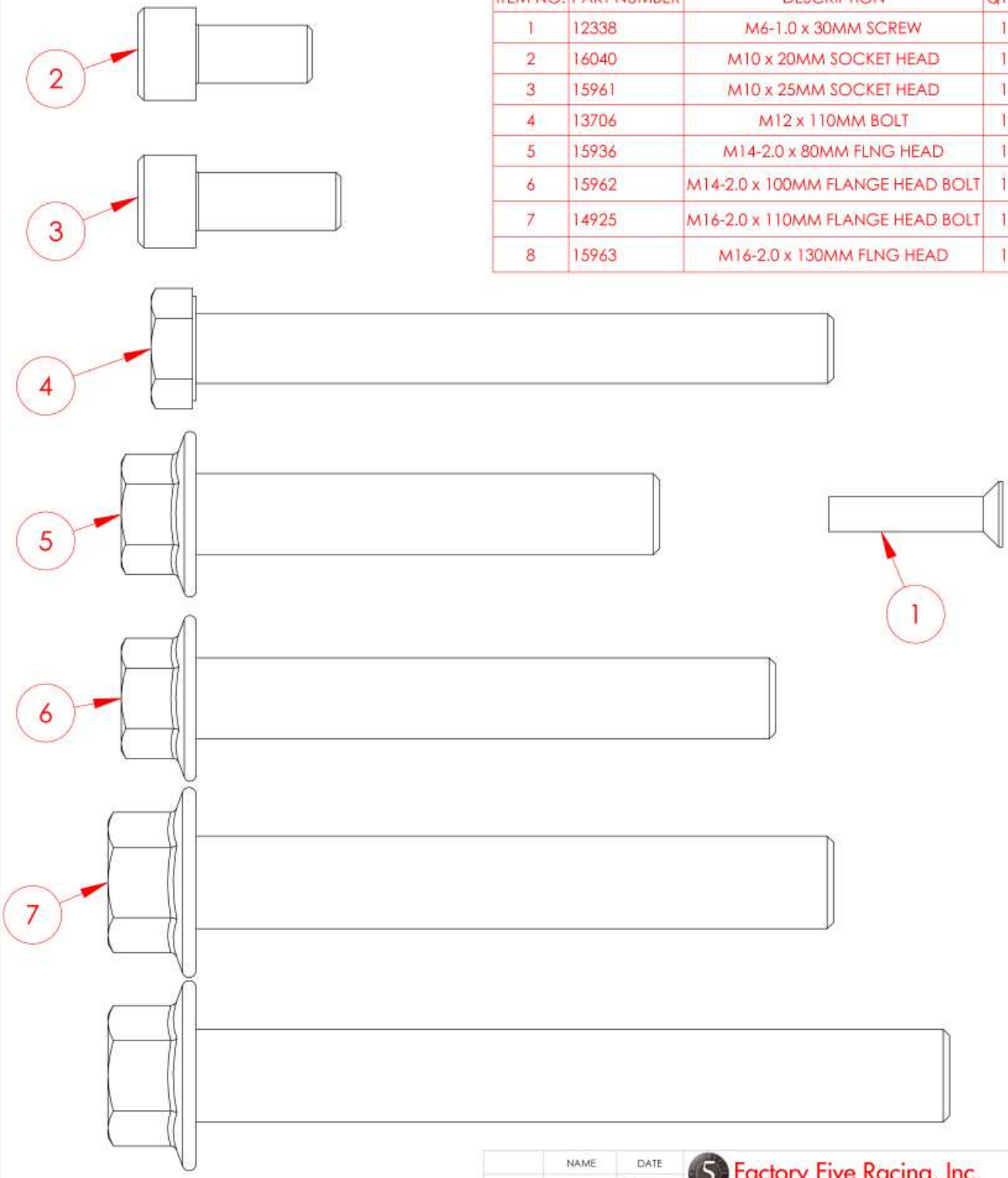

	NAME	DATE
DRAWN	JI	3/1/22

COMMENTS:

PRINTED 3/1/2022

Factory Five Racing, Inc.

METRIC FASTENER LENGTHS

SIZE A | DWG. NO. METRIC FASTENERS | REV. A

SCALE:1:1 | WEIGHT: | SHEET 1 OF 1

Appendix G – Standard Fastener Lengths

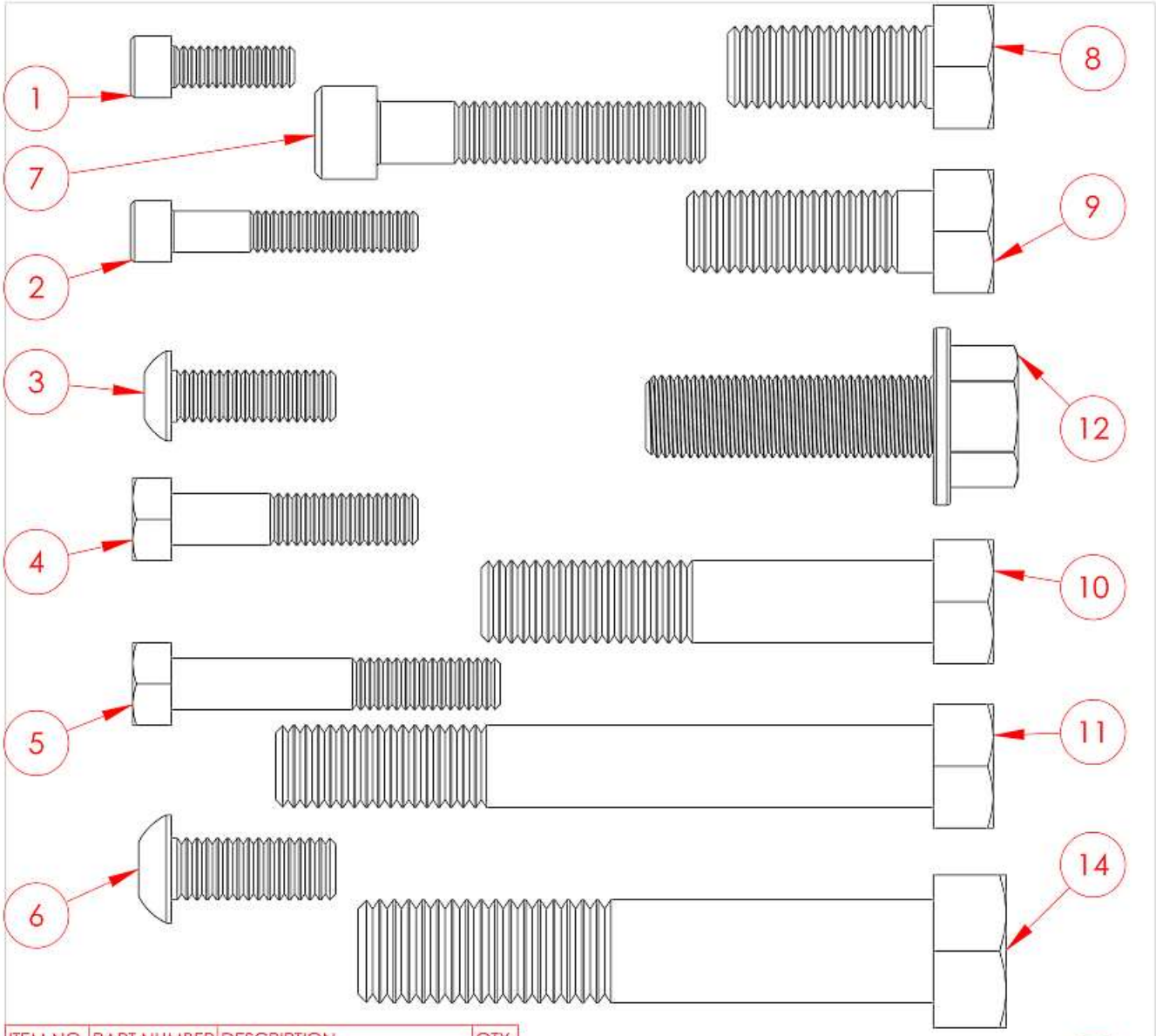

ITEM NO.	PART NUMBER	DESCRIPTION	QTY.
1	12335	1/4"-20 x 0.75" SOCKET HEAD	1
2	12336	1/4"-20 x 1.5" SOCKET HEAD	1
3	11024	5/16"-18 x 1" BUTTON HEAD	1
4	81130	5/16"-18 x 1.5" BOLT	1
5	15100	5/16"-18 x 2.00" BOLT	1
6	16665	3/8"-16 x 1" BUTTON HEAD	1
7	60387	3/8"-16 x 2" SOCKET HEAD	1
8	10833	1/2"-13 x 1.25" BOLT	1
9	16703	1/2"-13 x 1.50" BOLT	1
10	10842	1/2"-13 x 2.75" BOLT	1
11	12332	1/2"-13 x 4" BOLT	1
12	15138	0.50-20 X 1.75	1
13	25562	5/16"x 3/4" CARRIAGE BOLT	1
14	13212	5/8"-11 x 3.50" BOLT	1
15	10984	#14 x 1/2" SCREW	1

	NAME	DATE
DRAWN	JI	3/1/22
COMMENTS:		
PRINTED	3/2/2022	

Factory Five Racing, Inc.

STANDARD FASTENER LENGTHS

SIZE A DWG. NO. STANDARD FASTENERS REV. A

SCALE:1:1 WEIGHT: SHEET 1 OF 1

Appendix H – Fastener Pack List

17604	**MK5 ROADSTER FASTENER PACK**	1.00	EA
10851	#14 x 1.50" SCREW	2.00	EA
17692	#14 x 1/2" SS SCREW	2.00	EA
10984	#14 x 1/2" SCREW	13.00	EA
12962	#6 x 1/2" SCREW	4.00	EA
12780	#6 x 1/2" TRUSS HEAD SCREW	4.00	EA
16534	#8 x 1.50" OVAL HEAD SCREW	2.00	EA
10983	#8 X 3/4" OVAL HEAD SCREW	4.00	EA
13979	#8 x 3/4" SCREW w/WASHER	17.00	EA
80837	#10-32 x 0.625" BLK BUTTON HD	6.00	EA
80414	#10-32 x 0.625" PHILIPS HEAD	2.00	EA
15843	#10-32 x 0.625" OVAL HEAD	2.00	EA
10635	#10 WASHER	4.00	EA
10995	#10 x 1" SCREW	6.00	EA
12768	#10-32 SS NYLON LOCK NUT	10.00	EA
13976	1/2" WASHER	32.00	EA
10834	1/2"-13 NYLON LOCK NUT	20.00	EA
10833	1/2"-13 x 1.25" BOLT	10.00	EA
10842	1/2"-13 x 2.75" BOLT	2.00	EA
12386	1/2"-13 x 3.25" BOLT	2.00	EA
12332	1/2"-13 x 4" BOLT	2.00	EA
12218	1/2"-20 MECH LOCK NUT	4.00	EA
15138	1/2"-20 x 1.75" FLNG HEAD	4.00	EA
25590	1/2"x 1.25" CARRIAGE BOLT	4.00	EA
10802	1/4" NYLON LOCK NUT	24.00	EA
11088	1/4" WASHER	8.00	EA
16486	1/4"-20 x 0.625" BUTTON HEAD	4.00	EA
34364	1/4"-20 x 3/4" BLK BUTTON HEAD	4.00	EA
33524	1/4"-20 x 1" FLANGED BOLT	6.00	EA
33672	1/4"-20 X 1.25" BUTTON HEAD	8.00	EA
25862	1/4"-20 X 1.5" BUTTON HEAD	4.00	EA
33696	1/4"-20 X 1.75" BOLT	4.00	EA
33688	1/4"-20 x 1/2" FLNG BUTTON HD	4.00	EA
60519	1/4"-20 X 2.25" BOLT	2.00	EA
60520	1/4"-20 X 8.00" BOLT	2.00	EA
12572	3/8"-16 ACORN NUT	8.00	EA
12172	3/8"-16 MECH LOCK NUT	8.00	EA
13964	3/8"-16 NYLON LOCK NUT	4.00	EA
16665	3/8"-16 x 1" BUTTON HEAD	6.00	EA
10520	3/8"-16 x 1" SOCKET HEAD	1.00	EA
11040	3/8"-16 x 1.25" SOCKET HEAD	8.00	EA
60503	3/8"-16 x 2.25" BOLT	4.00	EA
60381	3/8"-16 FLNGD NYLN LOCK NUT	4.00	EA
11005	5/16" WASHER	27.00	EA
13963	5/16"-18 NYLON LOCK NUT	22.00	EA
25562	5/16"x 3/4" CARRIAGE BOLT	2.00	EA
11024	5/16"-18 x 1" BUTTON HEAD	16.00	EA
81130	5/16"-18 x 1.5" BOLT	8.00	EA

12776	5/16"-18 x 1.5" BUTTON HEAD	4.00	EA
34526	5/16"-18 FLANGED NYLON LOCK NUT	34.00	EA
11212	5/16"-24 LOCK NUT	1.00	EA
13965	7/16"-14 NYLON LOCK NUT	2.00	EA
12339	M6-1.0 LOCK NUT	6.00	EA
12338	M6-1.0 x 30MM SCREW	6.00	EA